falmec

QUIET | POWERFUL | RANGEHOODS

# INSTALLATION MANUAL

# Nuvola

falmecau.com

# CONGRATULATIONS

Congratulations and thank you for choosing a Falmec rangehood.

To avoid the risks that are always present when you use an electrical appliance it is important that the rangehood is installed correctly and that you read the safety instructions carefully to avoid misuse and hazards.

We recommend that you keep this instruction booklet for future reference and pass it on to any future owners.

## IMPORTANT INFORMATION

AFTER UNPACKING THE RANGEHOOD PLEASE REVIEW YOUR NEW ITEM TO ENSURE THAT IT HASN'T BEEN DAMAGED IN TRANSIT OR IS MISSING ANY COMPONENTS. FAILURE TO REPORT ANY ISSUE WITHIN 72 HOURS OF RECEIPT OF YOUR ITEM MAY RESULT IN ADDITIONAL CHARGES.

### ENVIRONMENTAL TIP

Information on disposal for users Most of the packing materials are recyclable.
Please dispose of those materials through your local recycling depot or by placing them in a appropriate collection bin.
If you wish to discard this product, please contact your local authorities and ask for the correct method of disposal.

TO AVOID THE RISK OF INJURY OR DAMAGE TO THE PRODUCT IT IS ESSENTIAL TO READ THESE INSTRUCTIONS PRIOR TO INSTALLATION AND USE.

## INSTALLATION WITH MOTOR ON THE HOOD

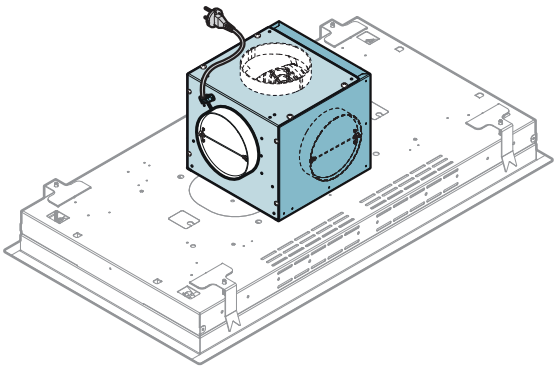

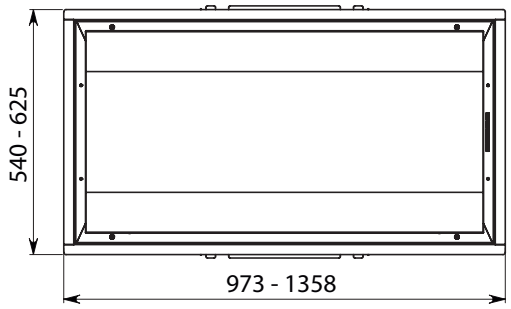


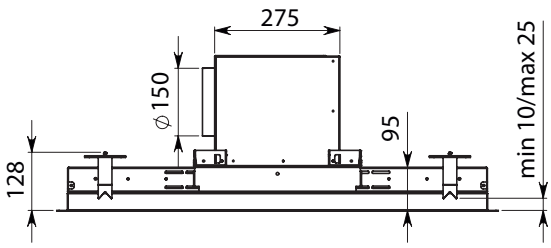


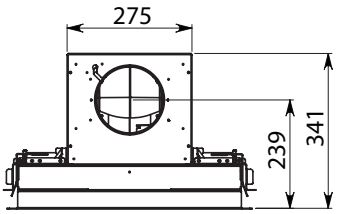


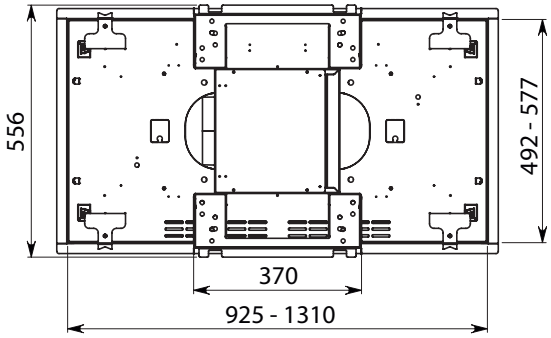

**NUVOLA 90: 32 KG**
**NUVOLA 140: 45 KG**

HOLE SIZES

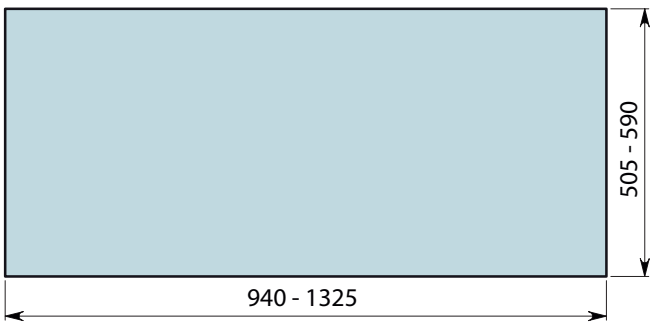

## INSTALLATION WITH SLIM MOTOR

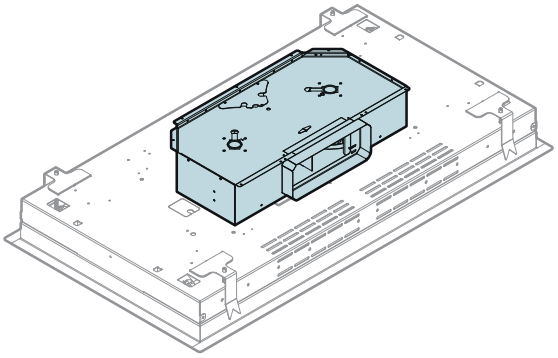

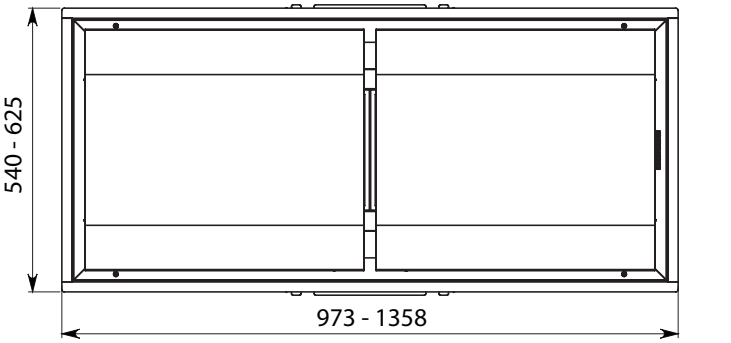


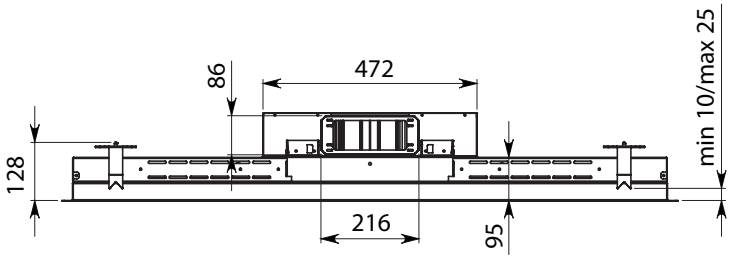


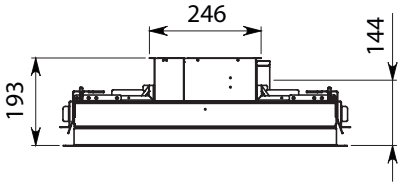


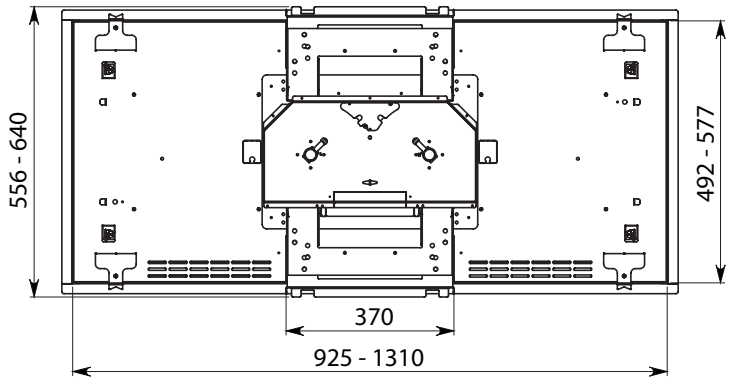

**NUVOLA 90: 31 KG**
**NUVOLA 140: 44 KG**

HOLE SIZES

## INSTALLATION WITH CONVEYOR KIT AND REMOTE MOTOR

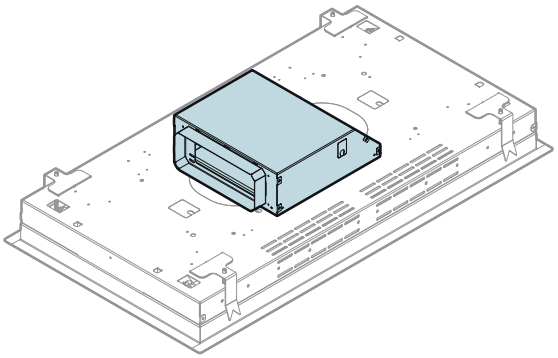

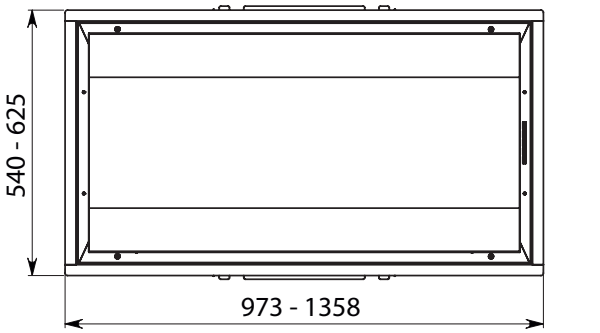


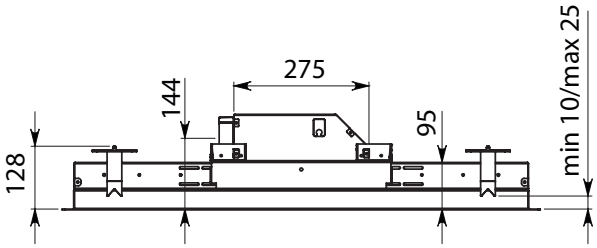


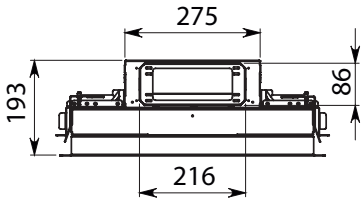


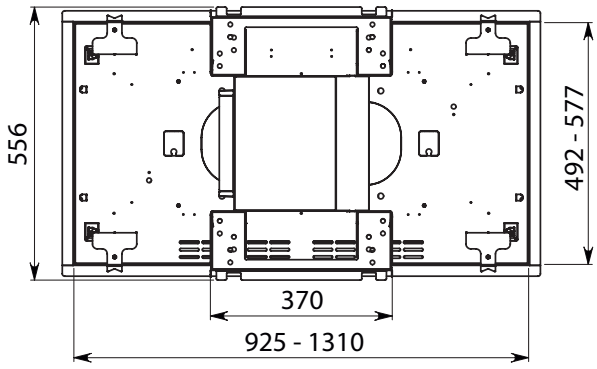

**NUVOLA 90: 24 KG**
**NUVOLA 140: 37 KG**

HOLE SIZES

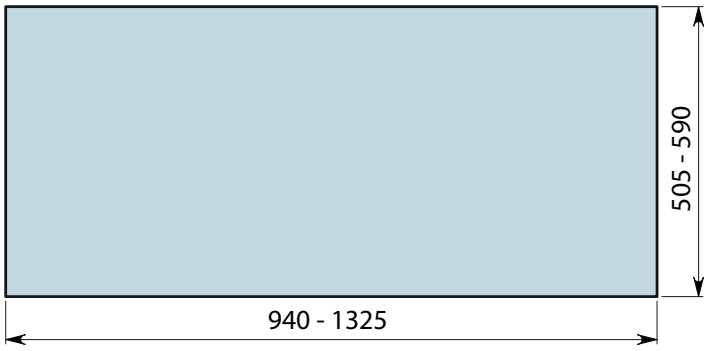

## INSTALLATION WITH REMOTE MOTOR

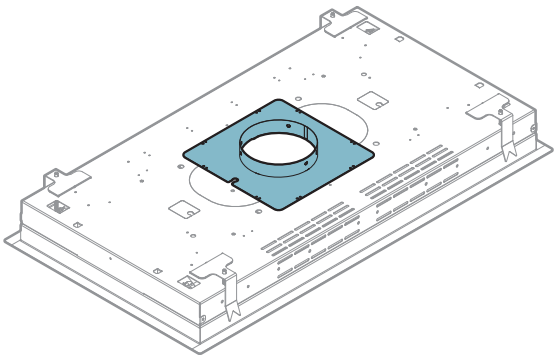

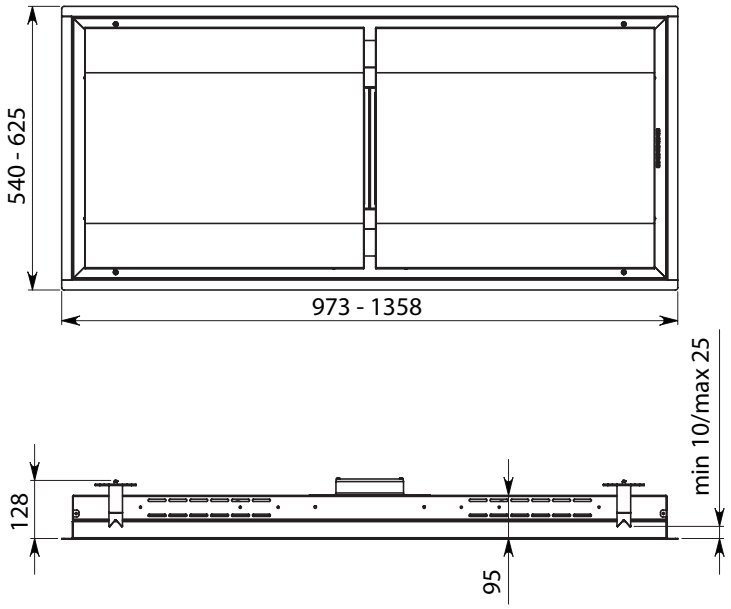


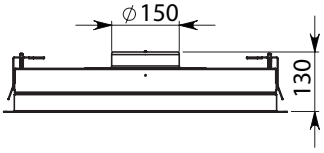


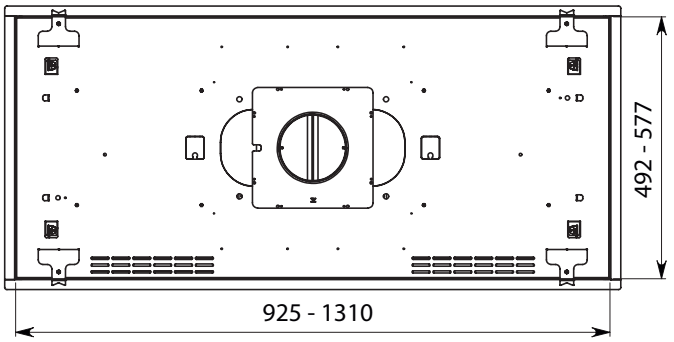

**NUVOLA 90: 22 KG**
**NUVOLA 140: 35 KG**

HOLE SIZES

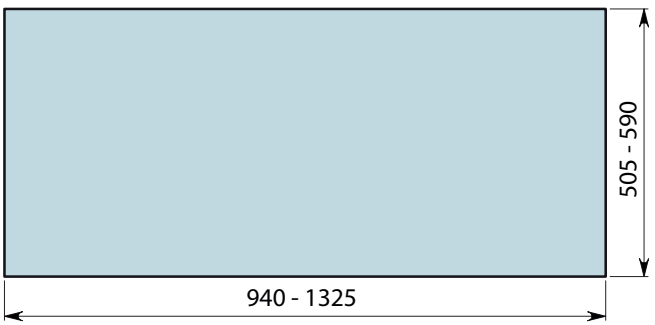

## MEASUREMENTS FOR INSTALLATION

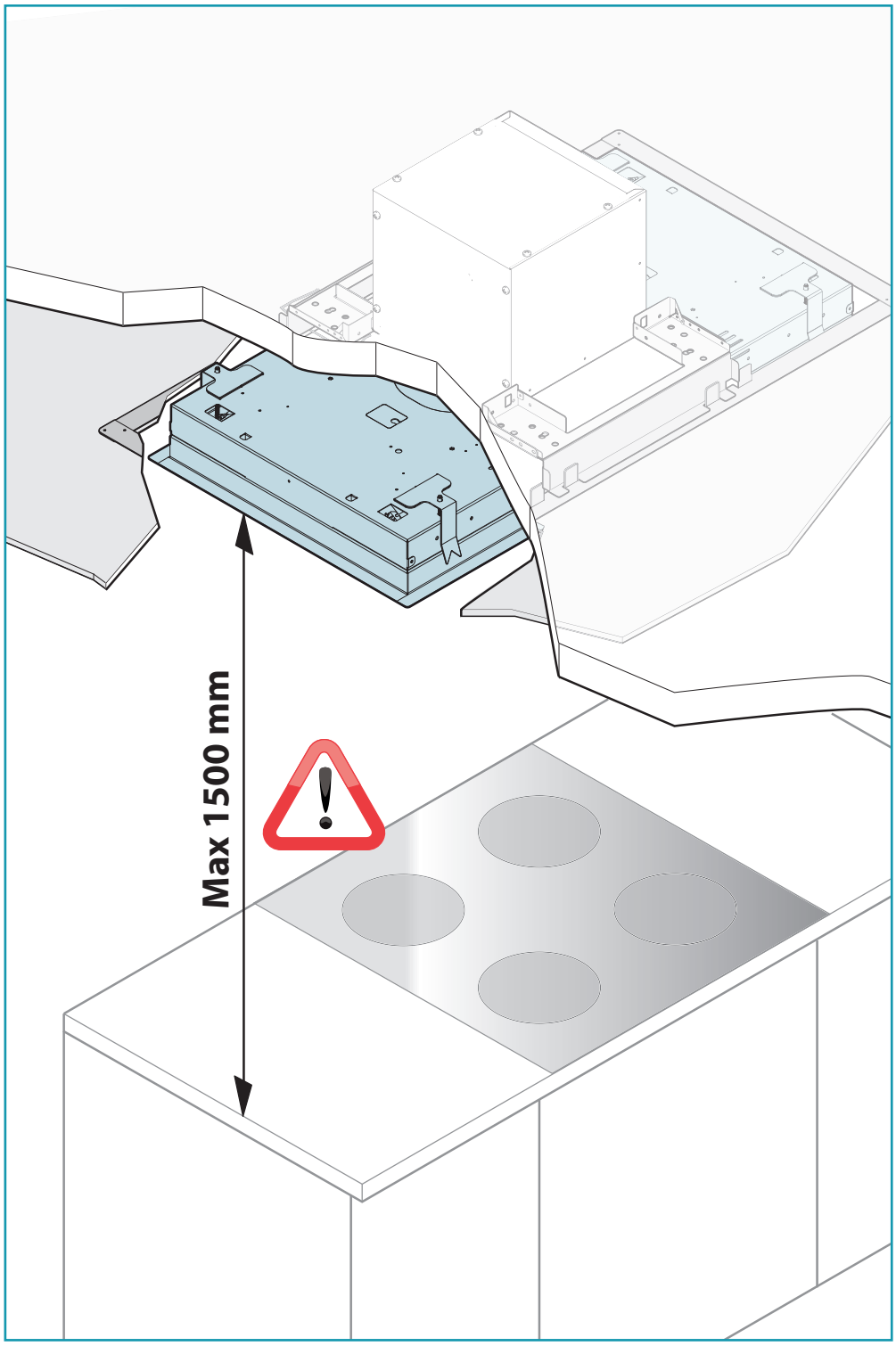


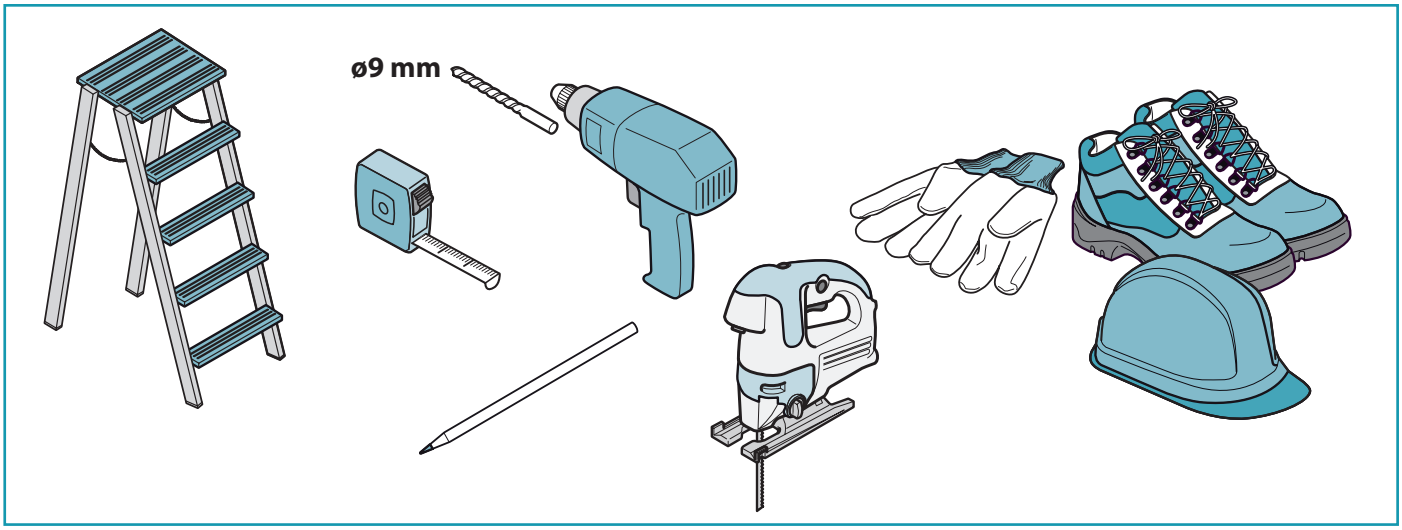

## PRELIMINARY OPERATIONS

**Cutting the plasterboard (1), inserting the supporting frame (2)**

1

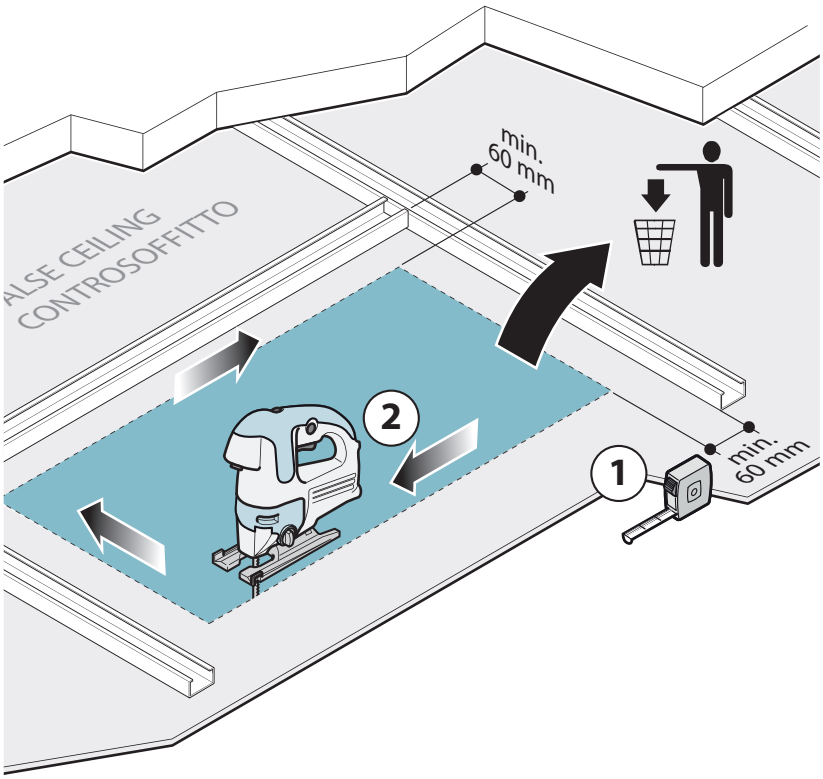


2

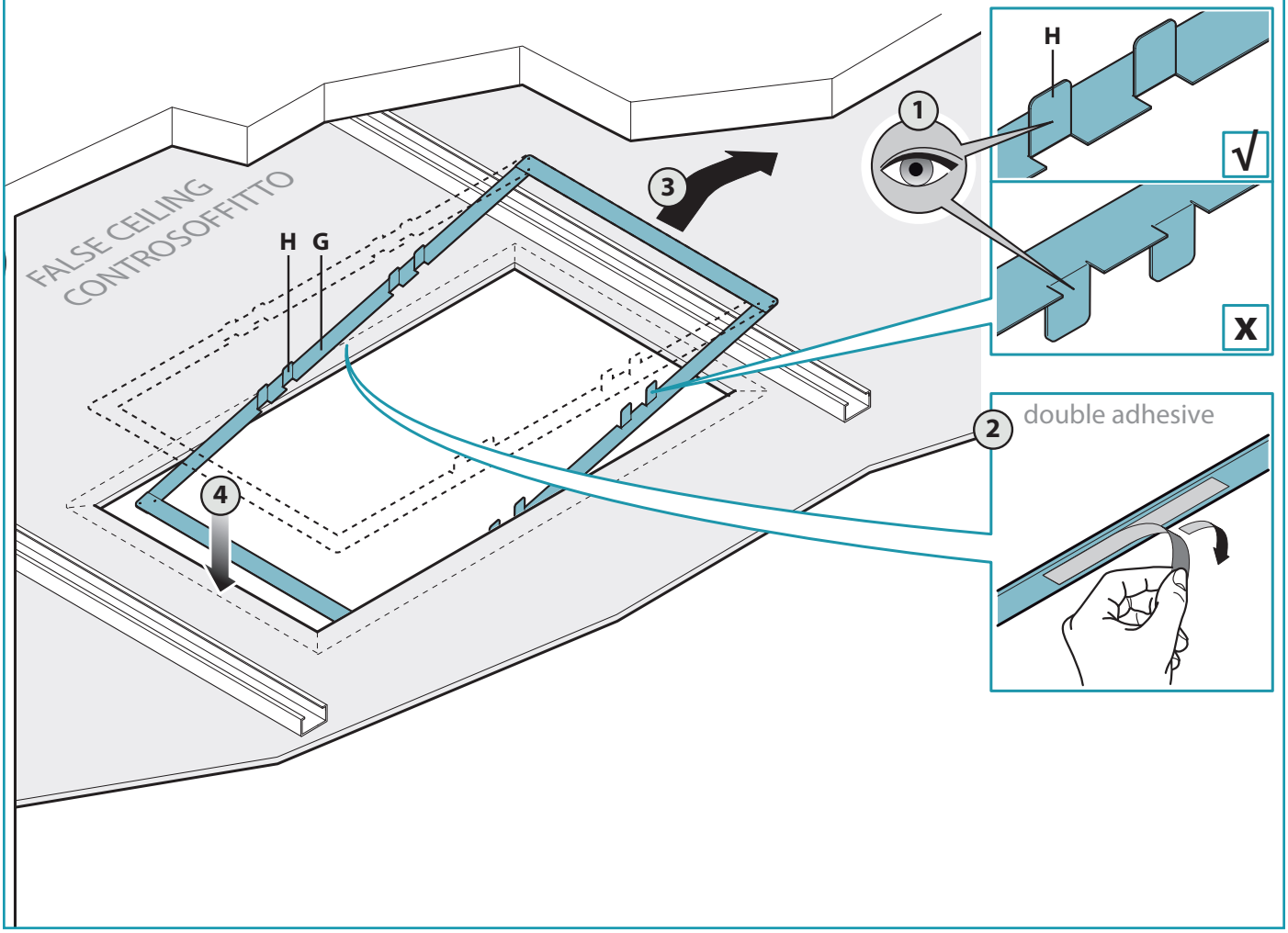

## PRELIMINARY OPERATIONS

**Fixing the mandatory safety chains to the ceiling.**

**3**

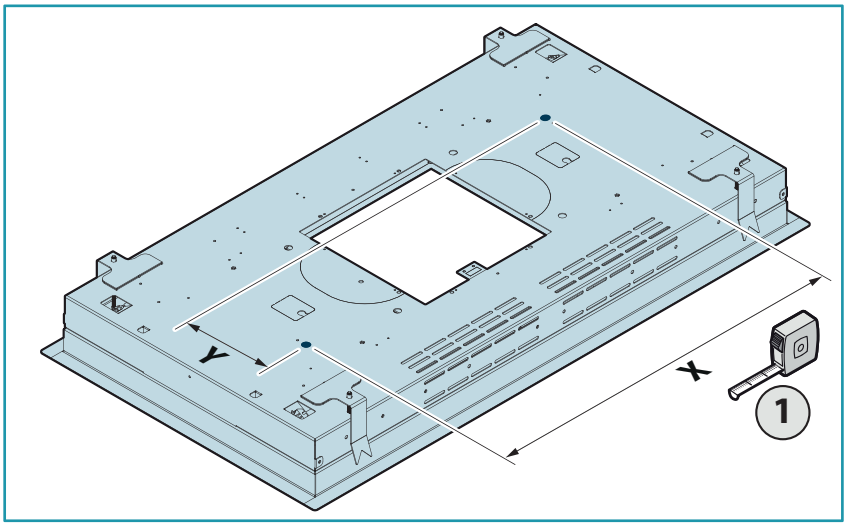


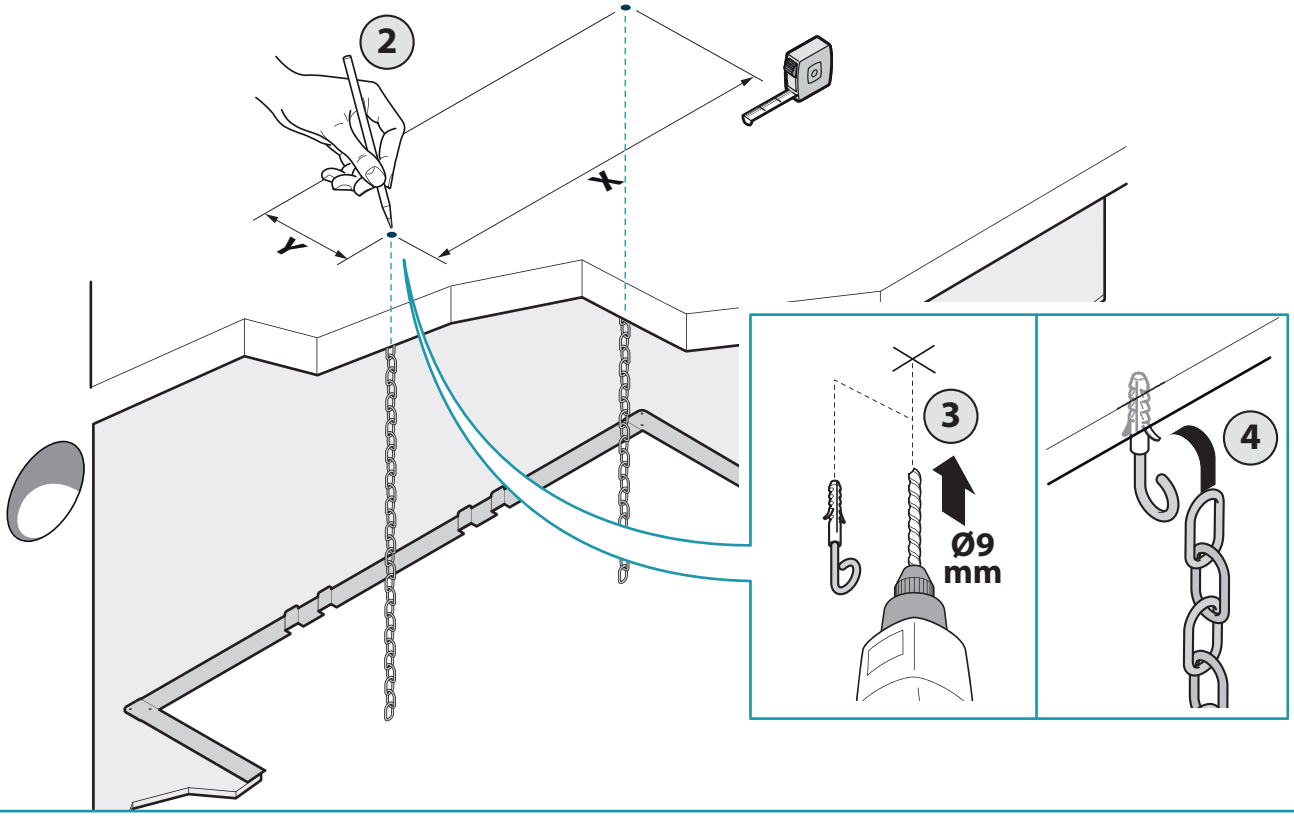

## PRELIMINARY OPERATIONS

**Open the panel, remove the filters (4) and gas piston (5).**

**4**

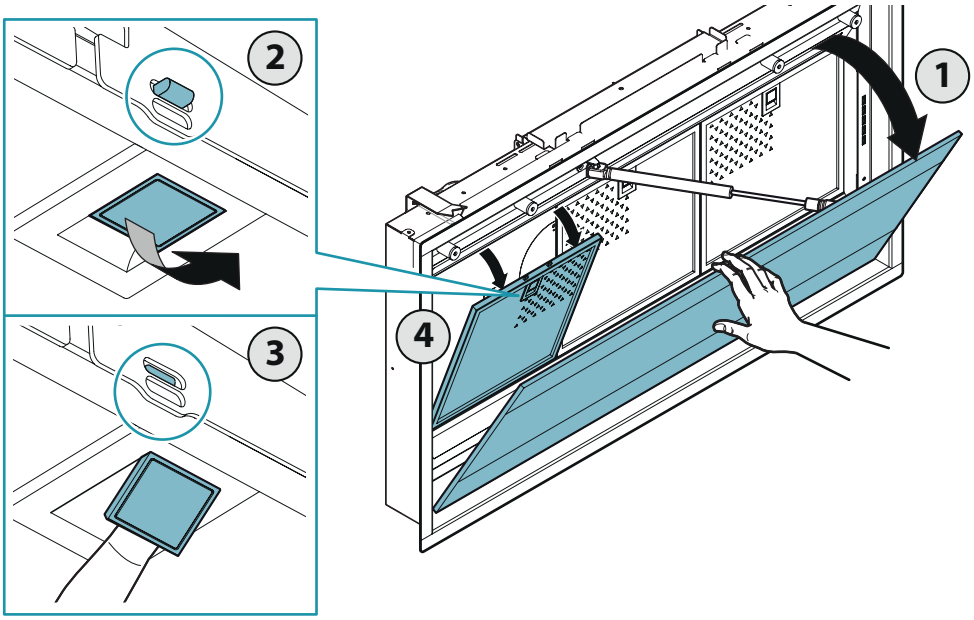


**5**

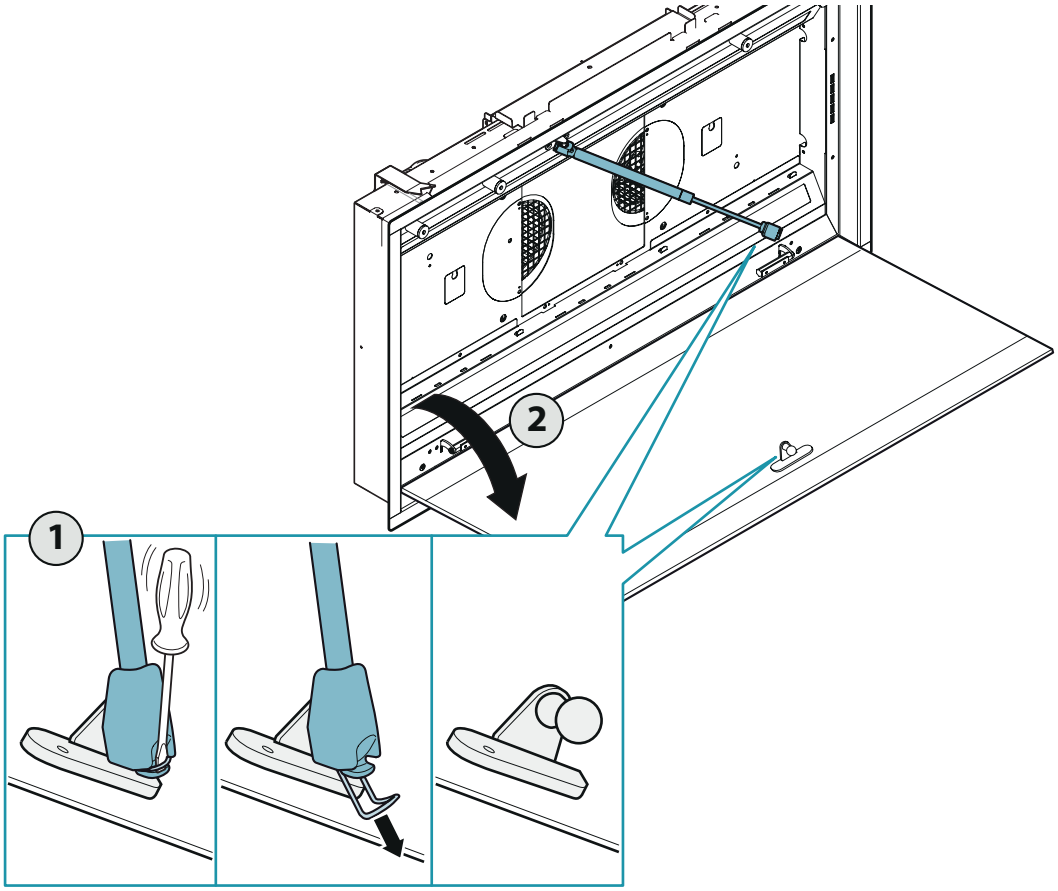

## INSTALLATION WITH MOTOR ON THE HOOD

Remove the flange from the hood (1) and the motor (2). If the air outlet is upward, see (3). For other directions, see (4) and (5).

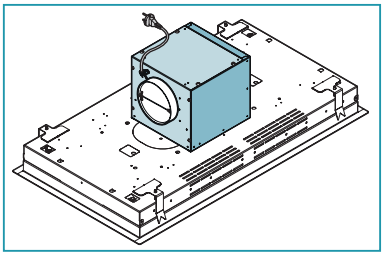

**1**

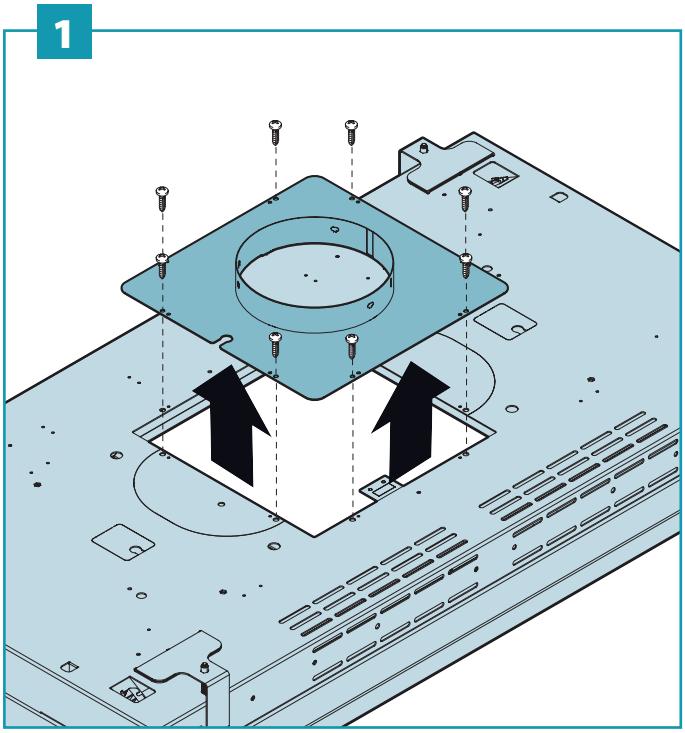

**2**

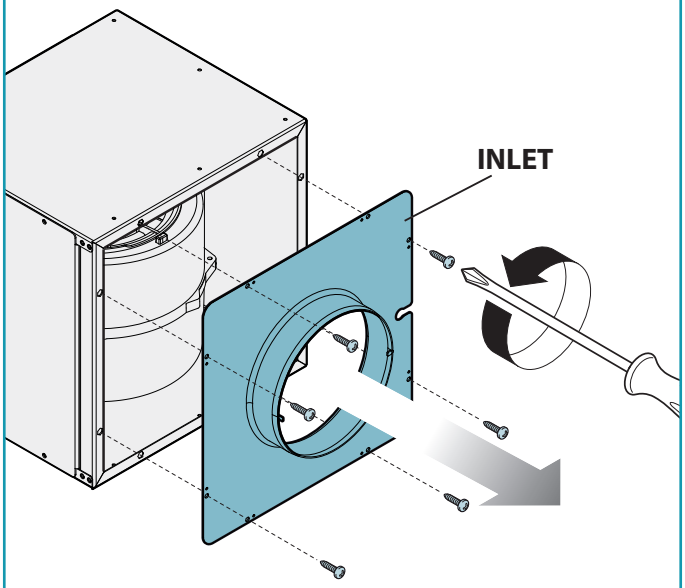


**3**

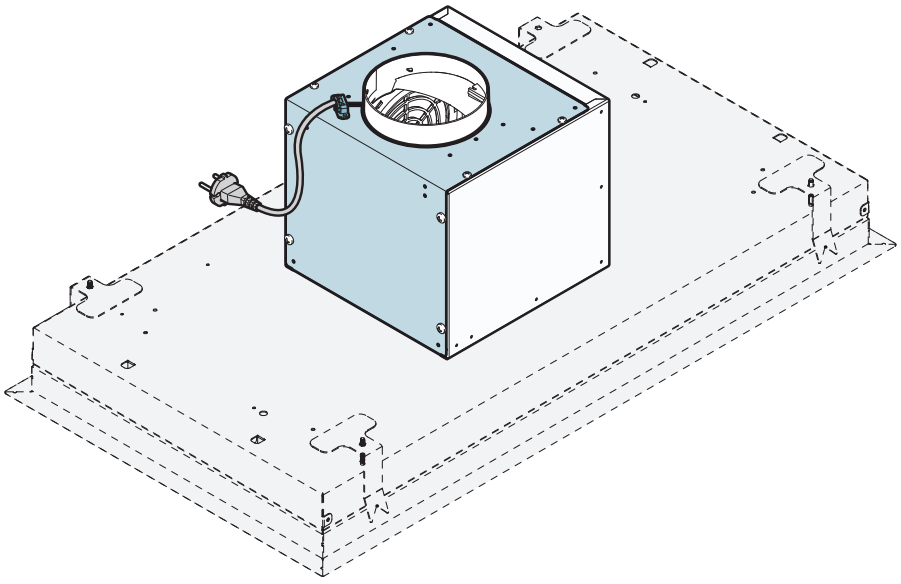

## INSTALLATION WITH MOTOR ON THE HOOD

**Side movement of the air exhaust**

**4**

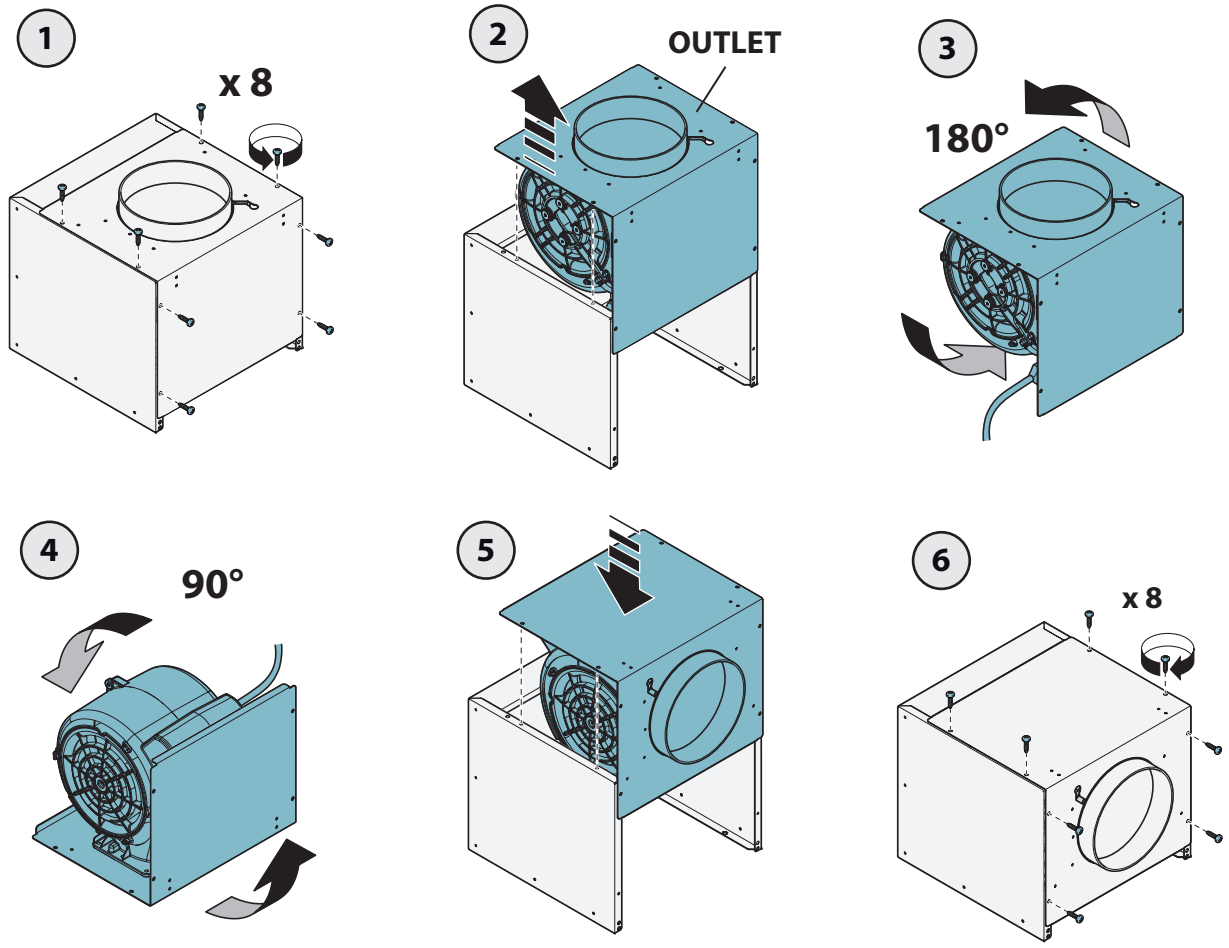


**5**

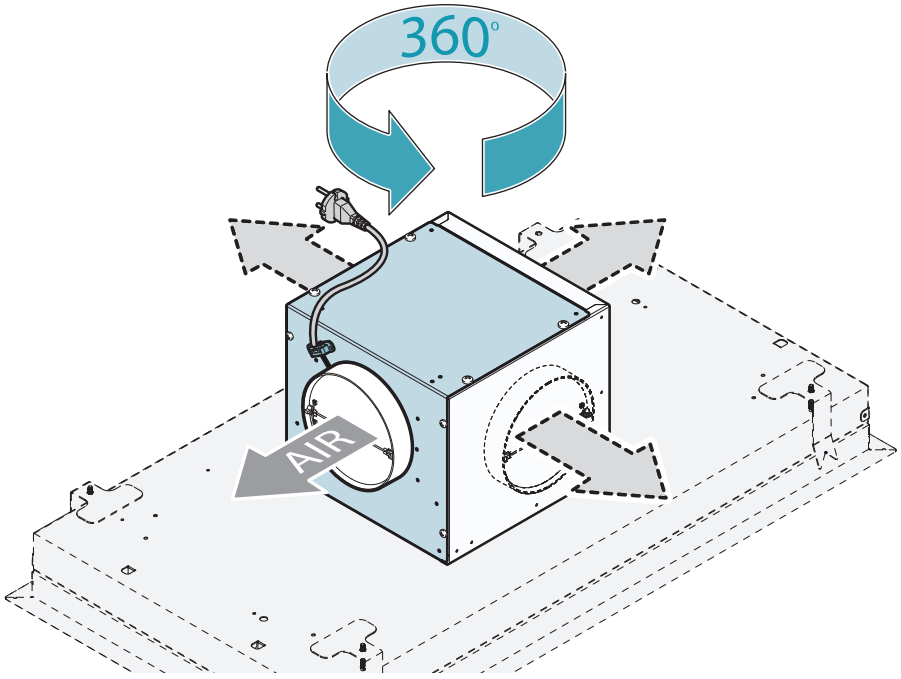

## INSTALLATION WITH MOTOR ON THE HOOD

**6**

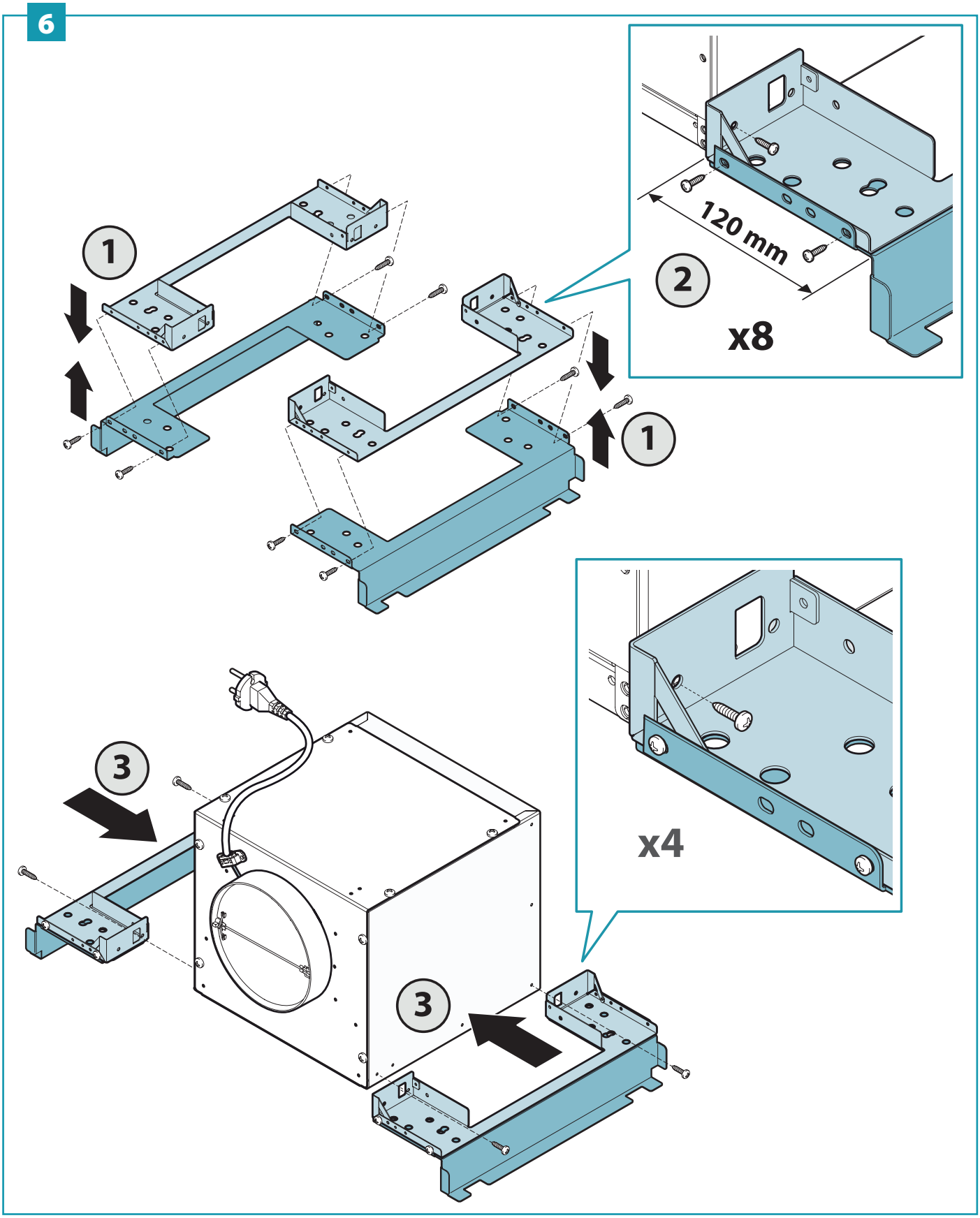

## INSTALLATION WITH MOTOR ON THE HOOD

**Fixing the motor support brackets(7)**
**Positioning the motor on the support frame (8)**

**7**

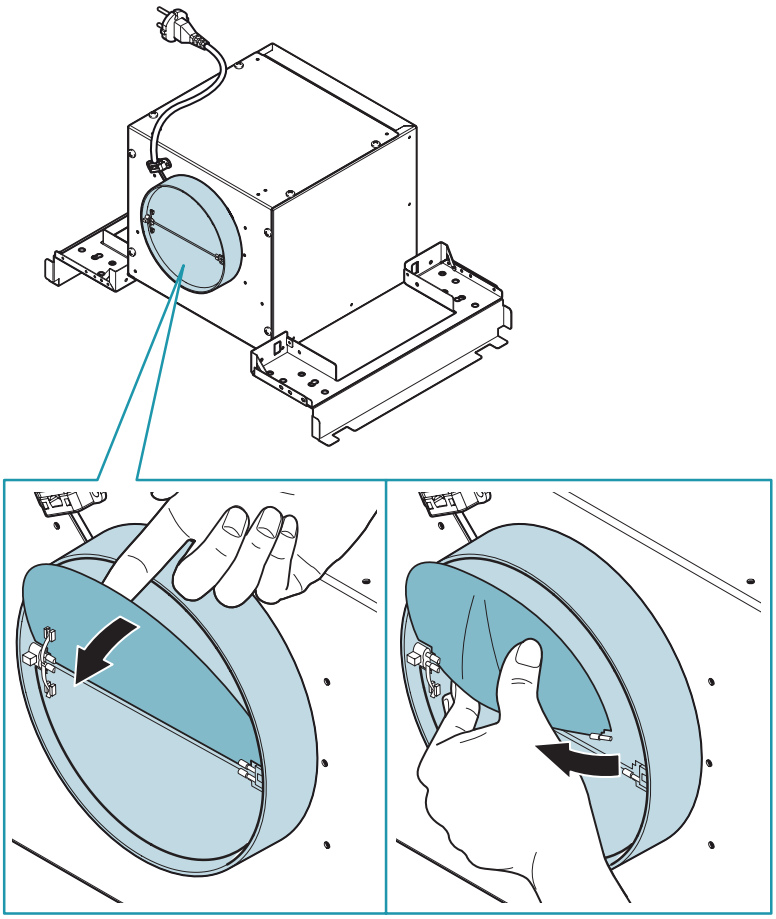

**8**

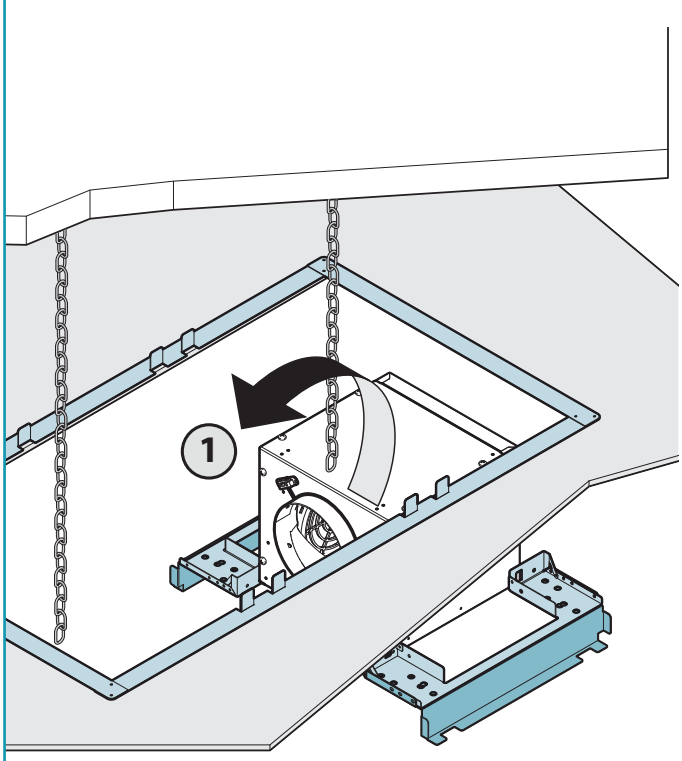


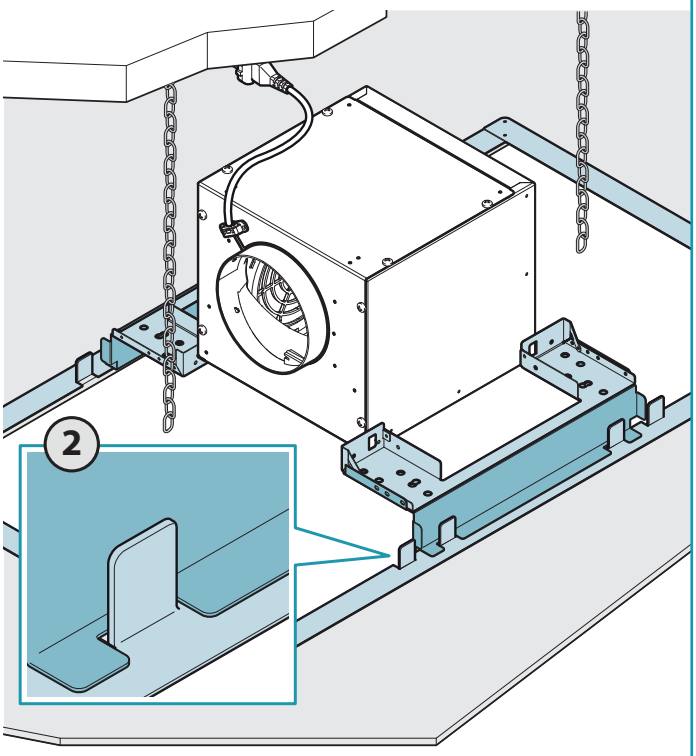

## INSTALLATION WITH MOTOR ON THE HOOD

**Fitting the suction pipe and electrical connection (9).**

**9**

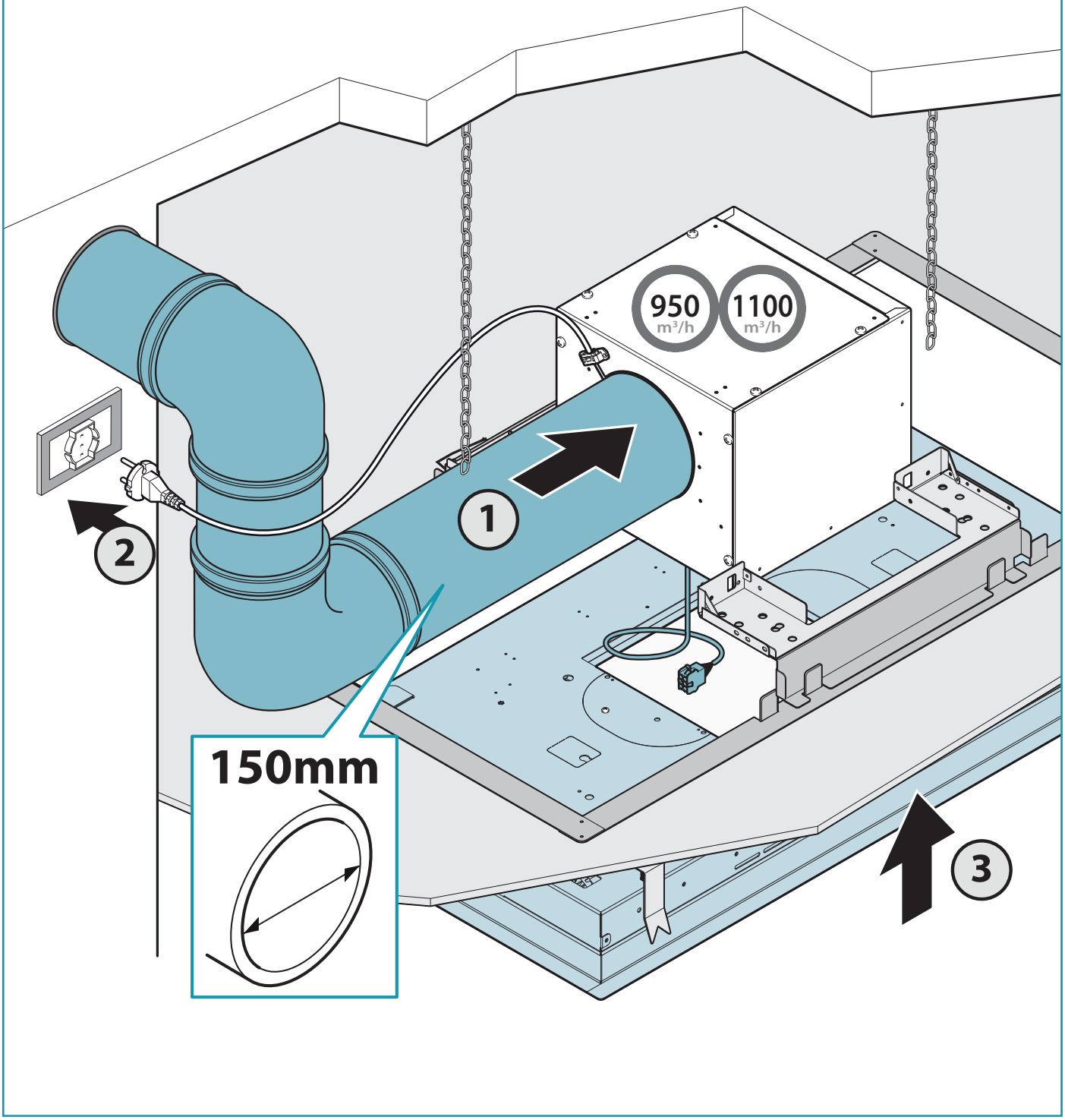

## SLIM MOTOR

**Remove the flange from the hood (1).**
**Detach pre-cut elements and position the slim motor bracket**

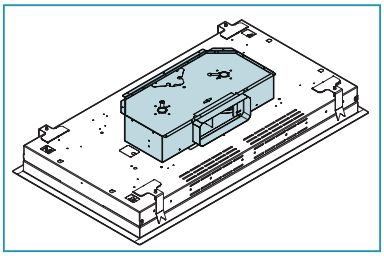

**1**

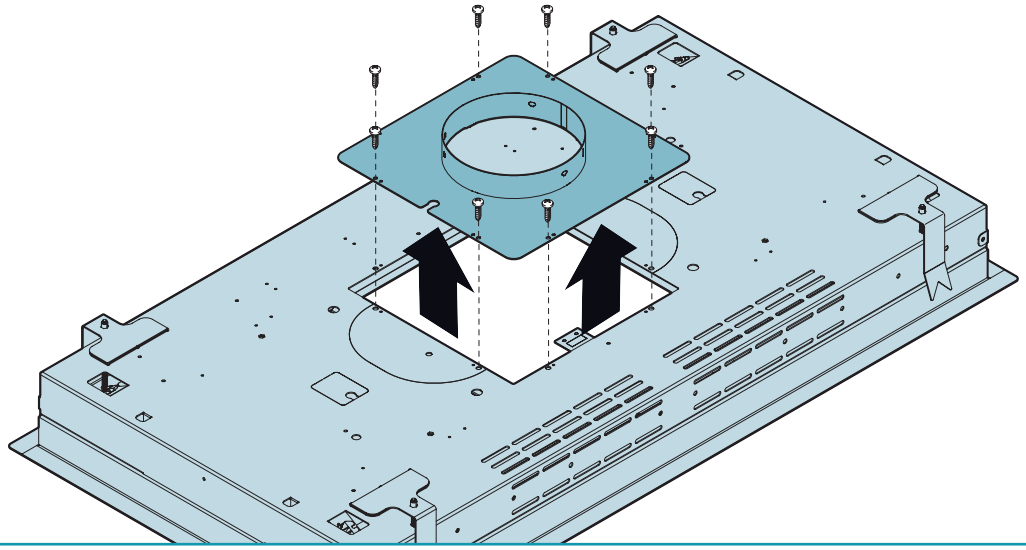

**2**

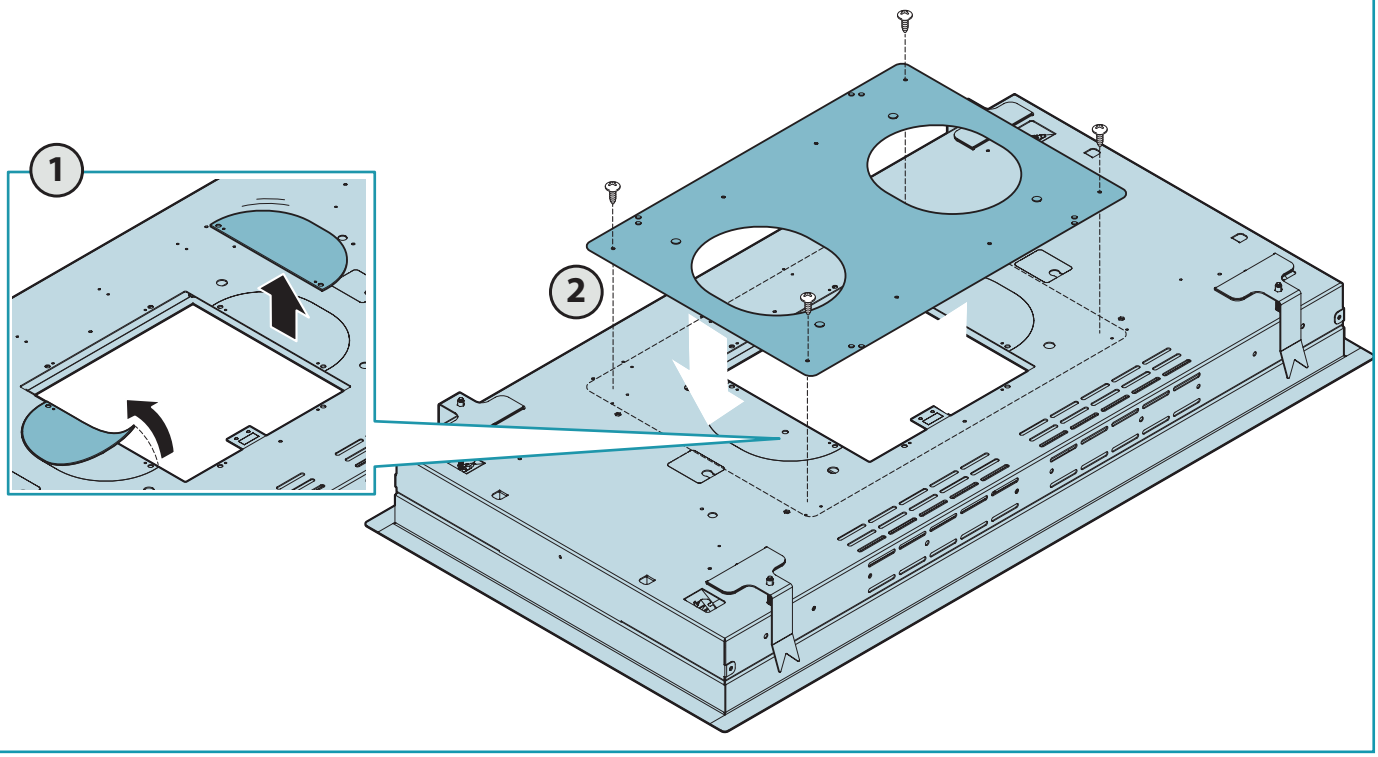

## SLIM MOTOR INSTALLATION

**Fixing the motor support brackets (3).**

**3**

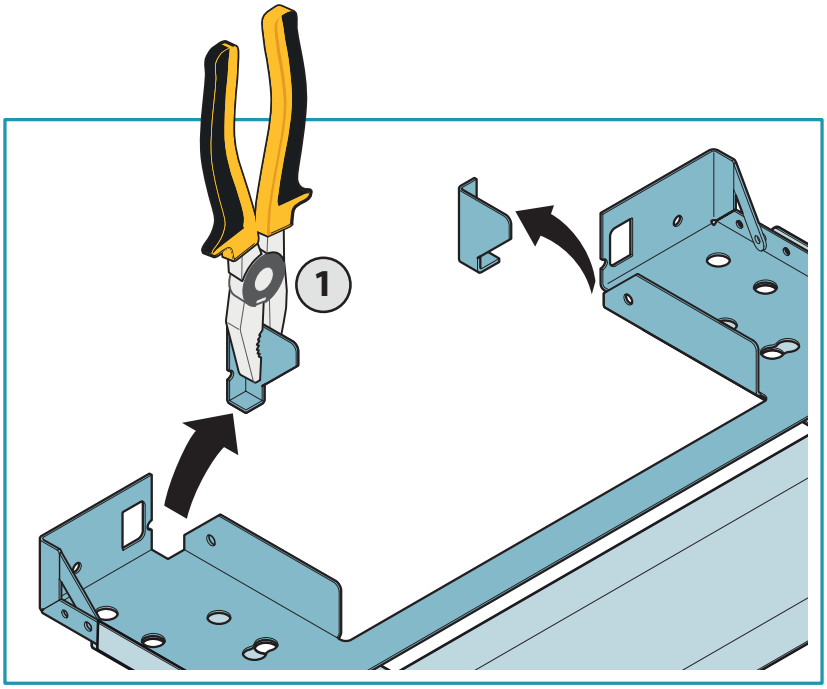


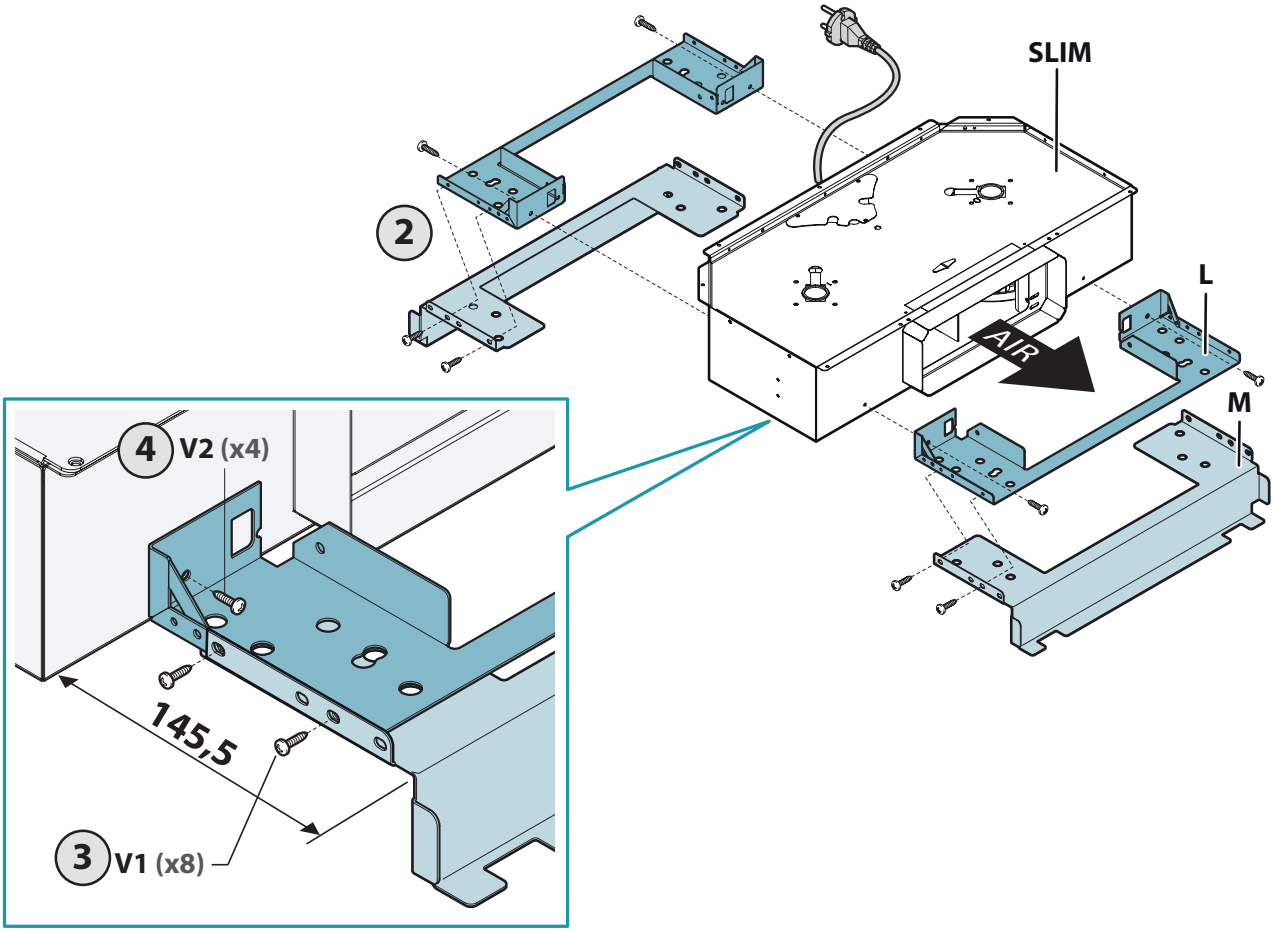

## SLIM MOTOR INSTALLATION

**Positioning the motor on the support frame (4).**
**Fitting the suction pipe and electrical connection (5).**

**4**

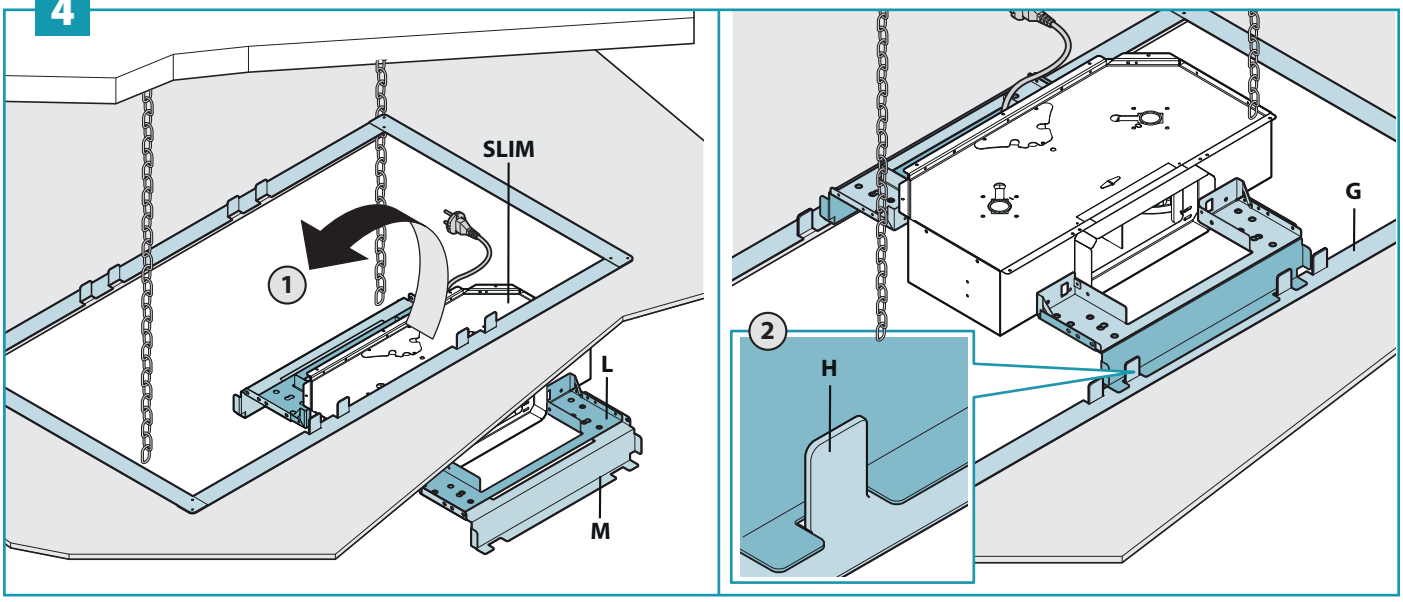


**5**

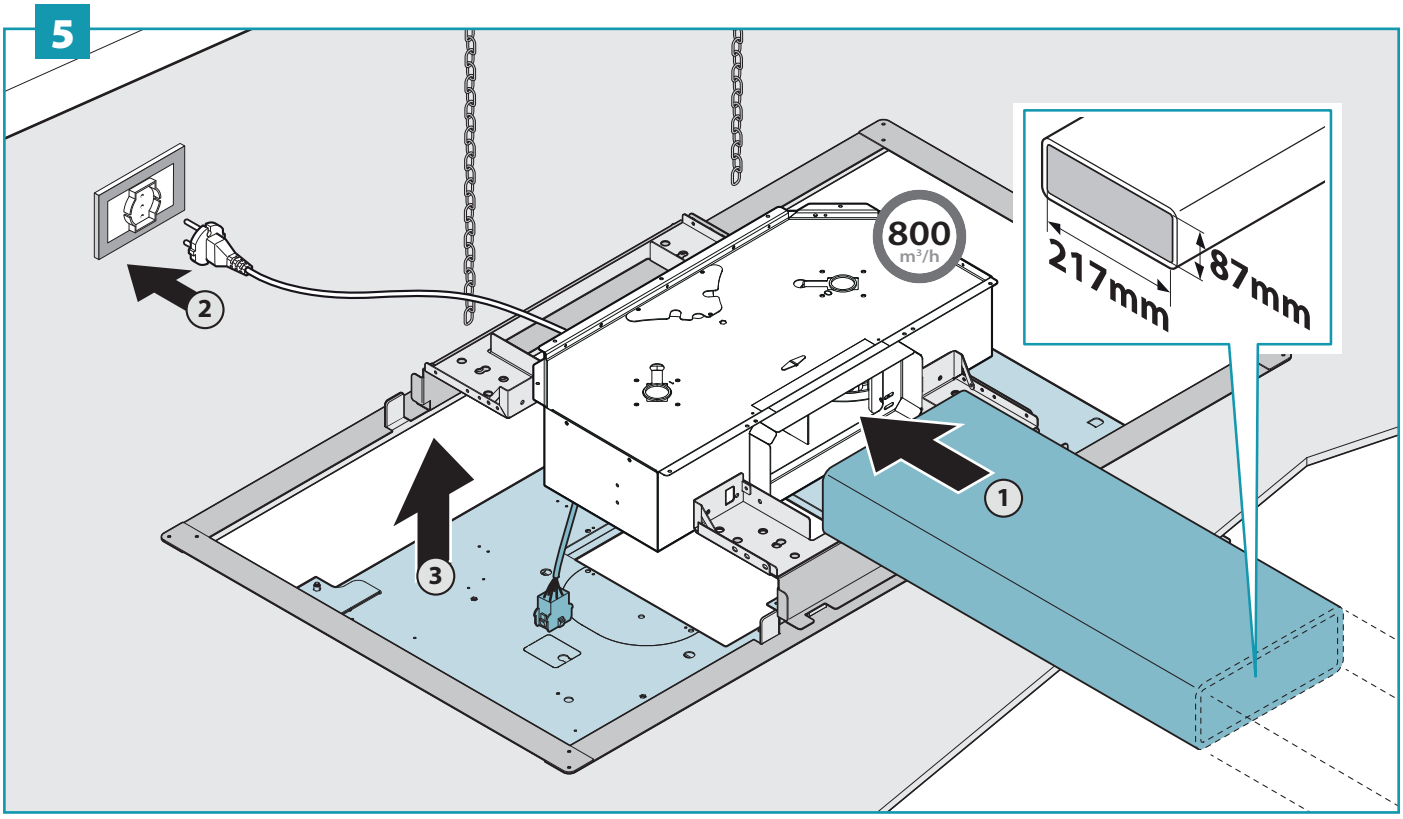

## INSTALLATION WITH CONVEYOR KIT AND REMOTE MOTOR

Remove the flange from the hood (1).
Fixing the brackets onto the rectangular connection (2).

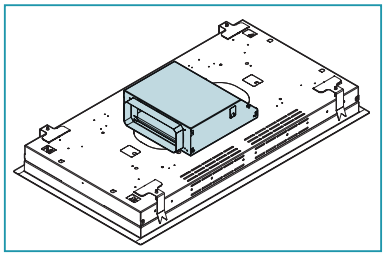

**1**

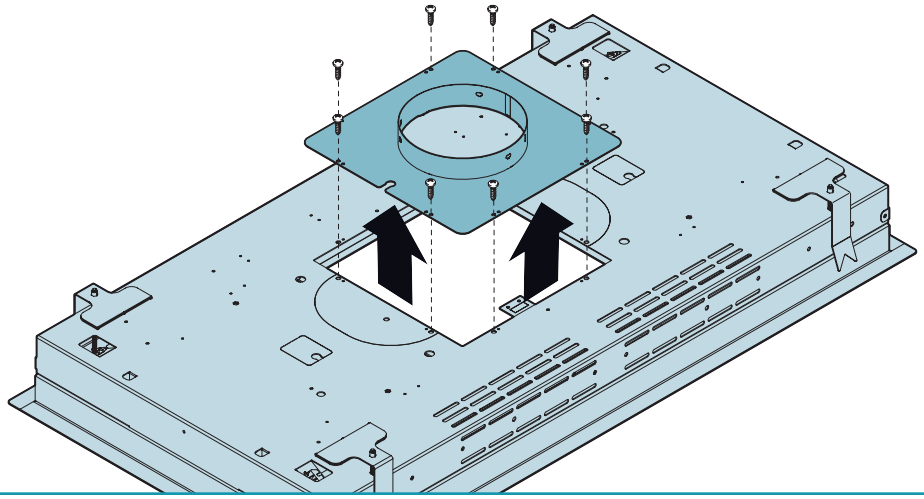

**2**

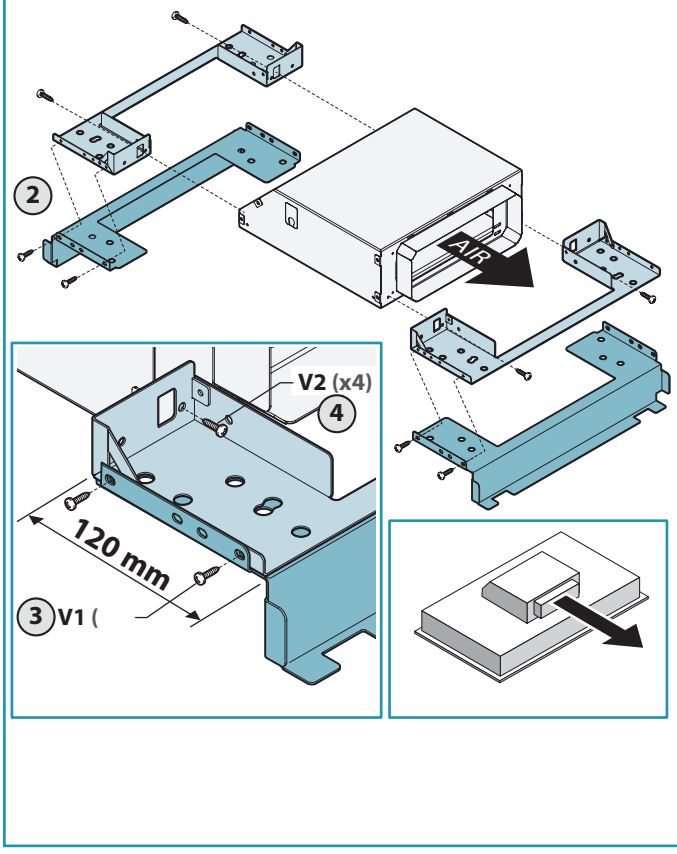


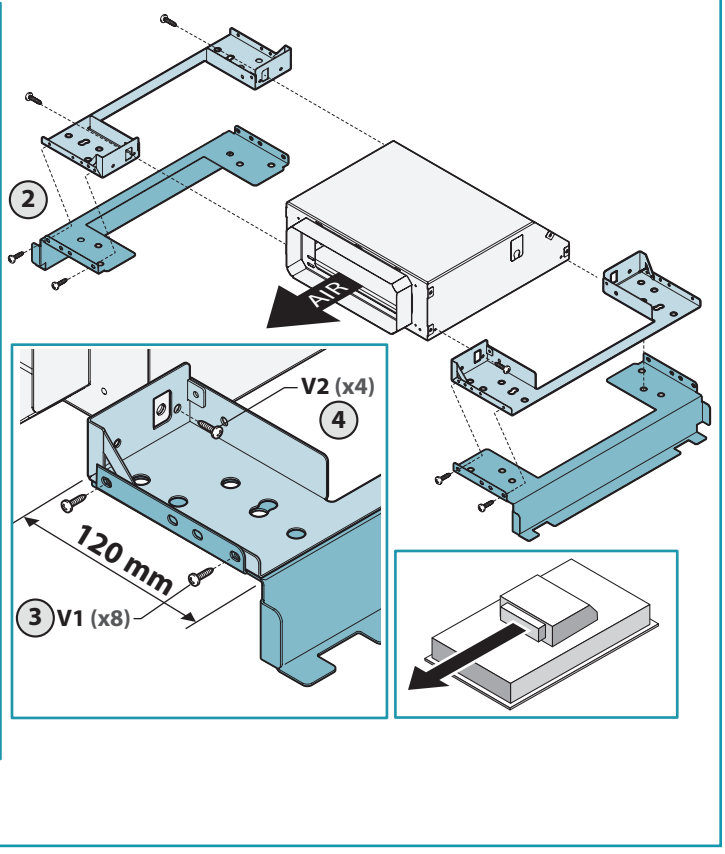

## INSTALLATION WITH CONVEYOR KIT AND REMOTE MOTOR

**Positioning the rectangular connection on the support frame (3).**
**Fitting the suction pipe (4).**

**3**

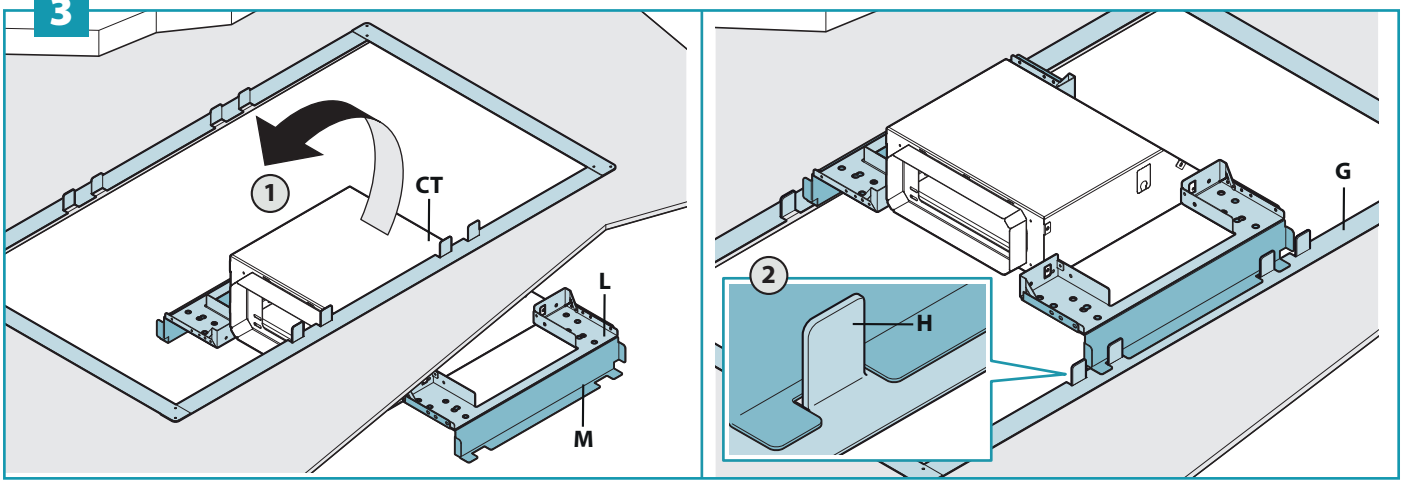


**4**

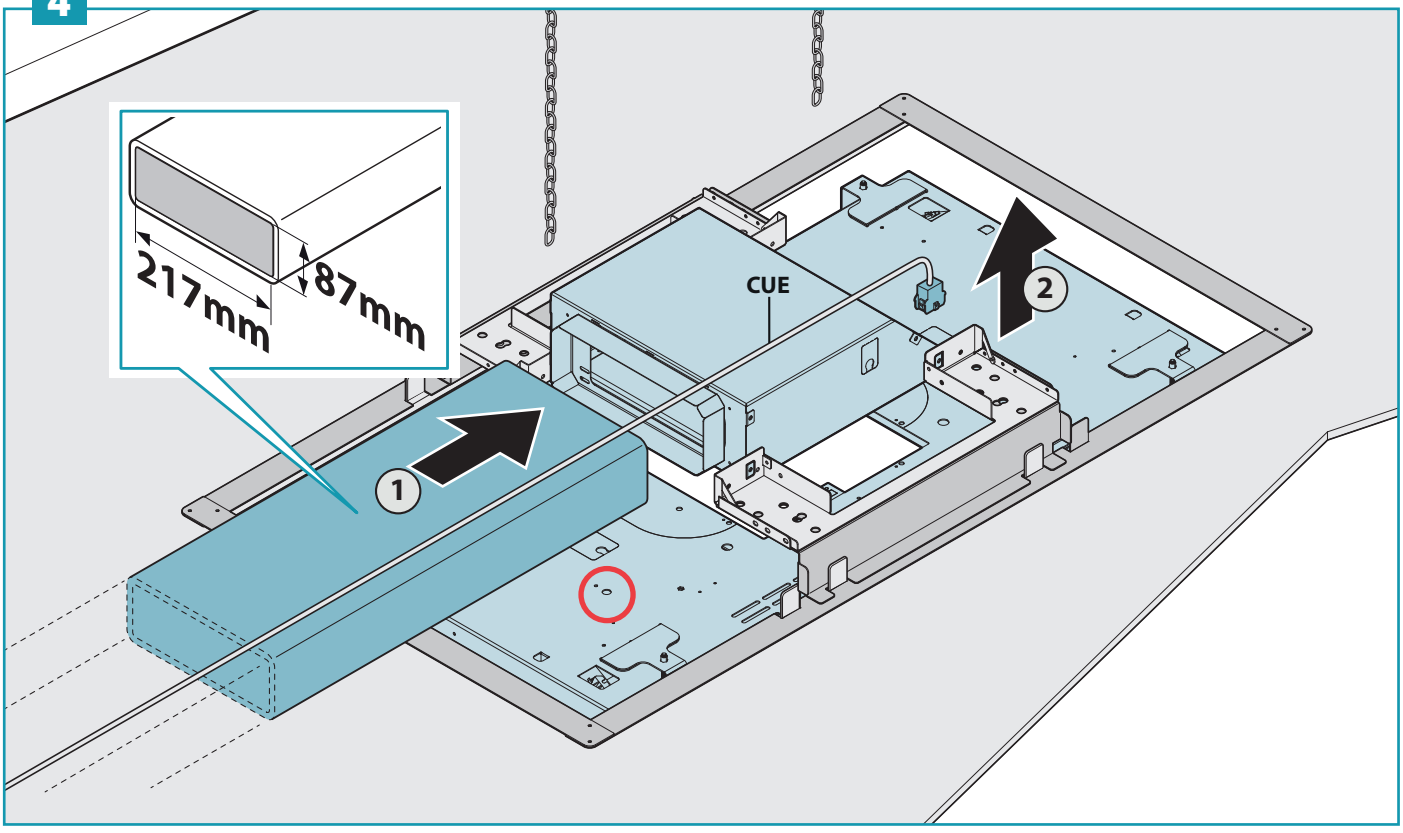

## REMOTE MOTOR INSTALLATION

**Fitting the non-return valve (1).**

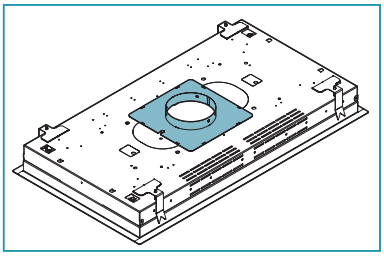

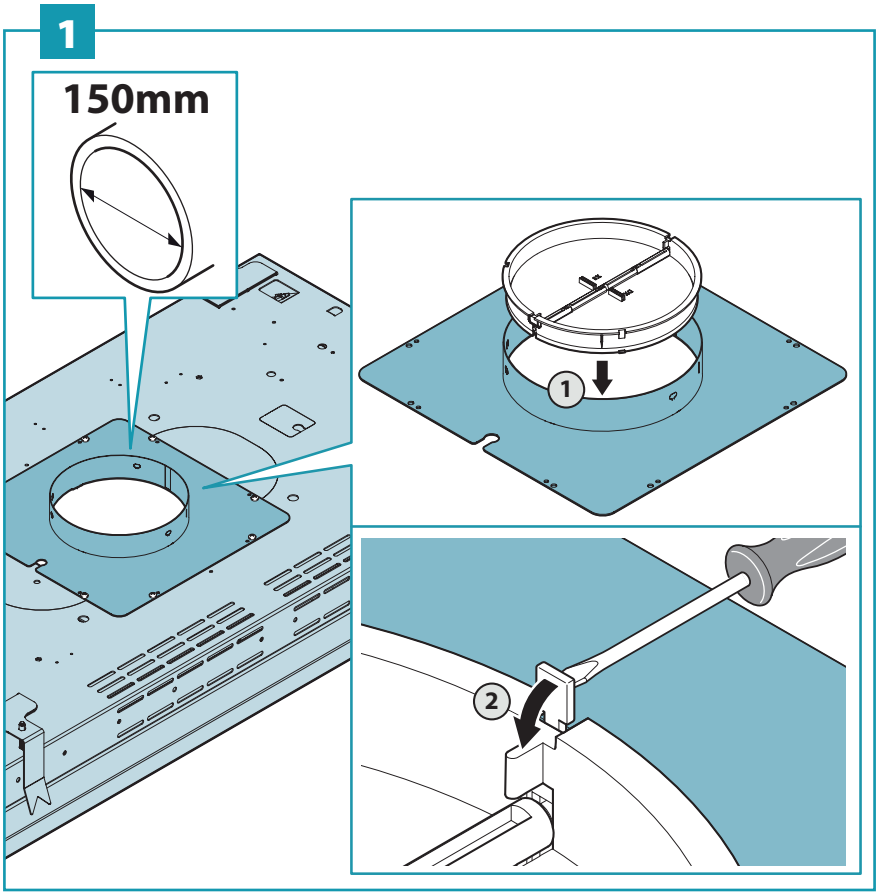


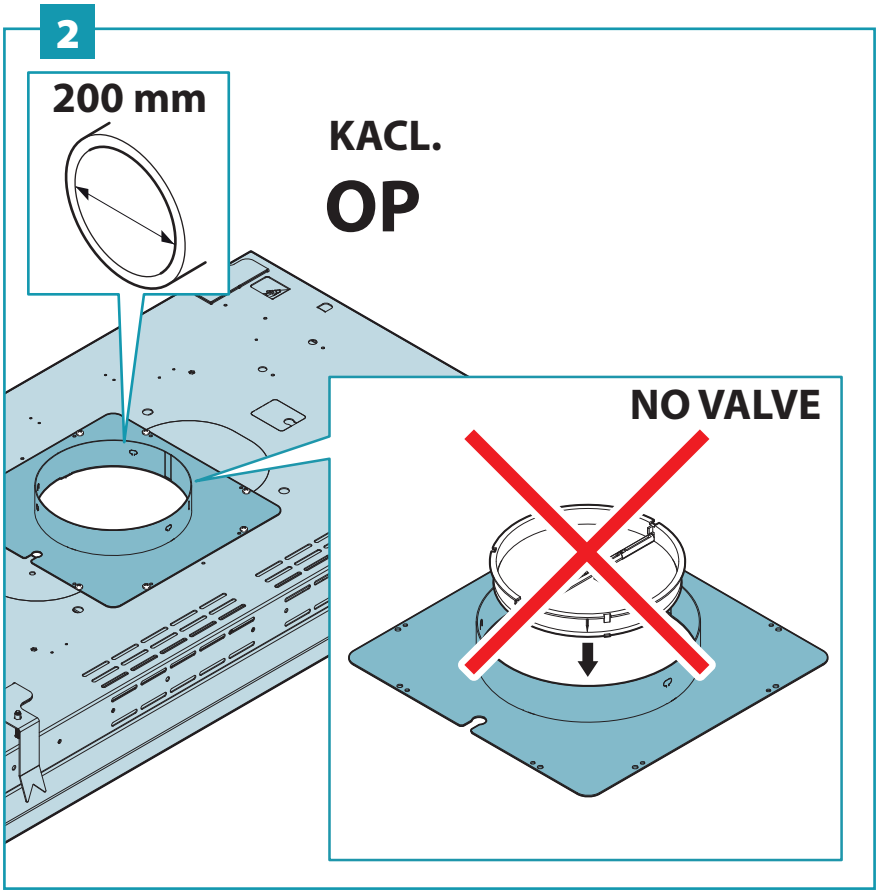

## REMOTE MOTOR INSTALLATION

**Fixing the suction pipe (3).**

**3**

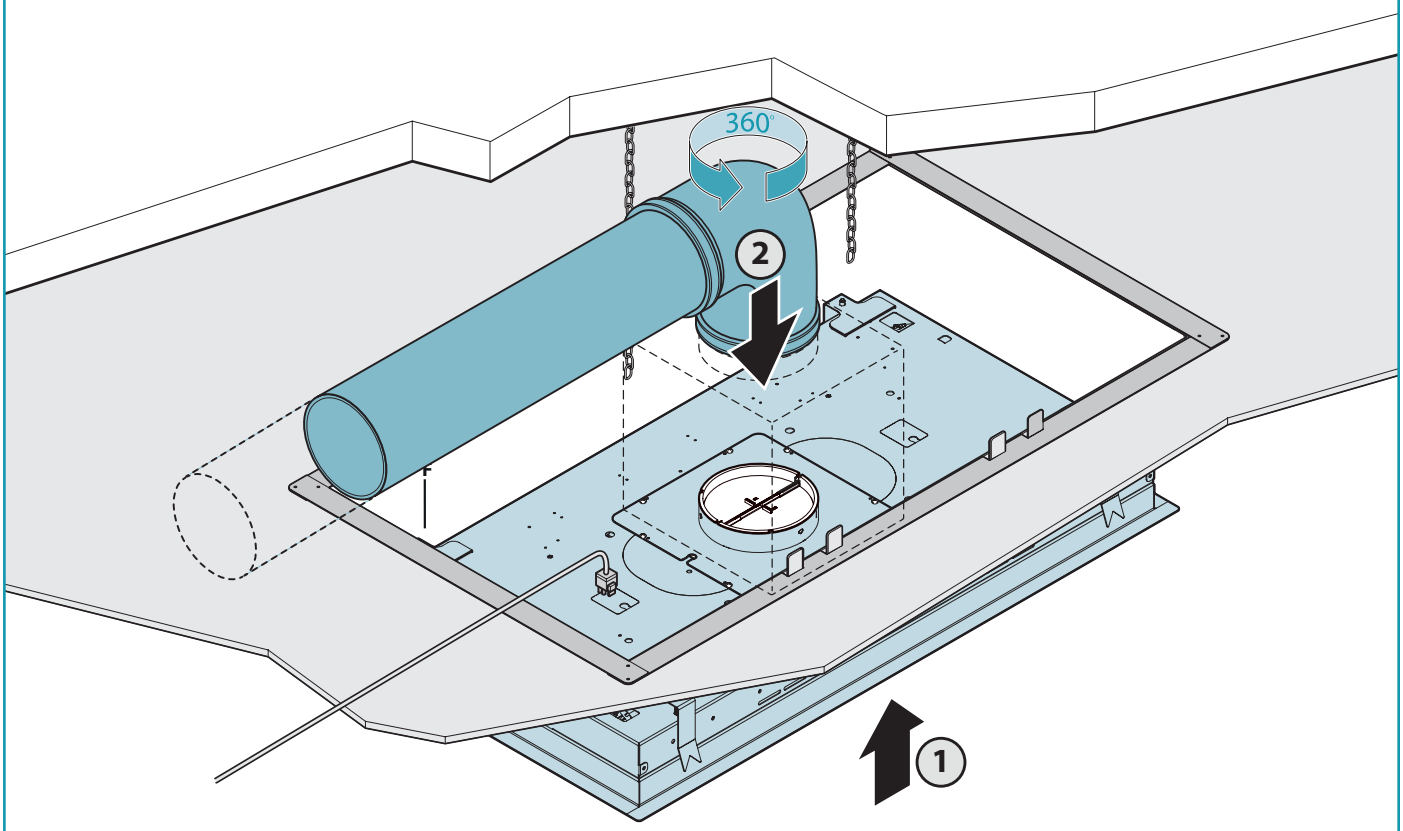


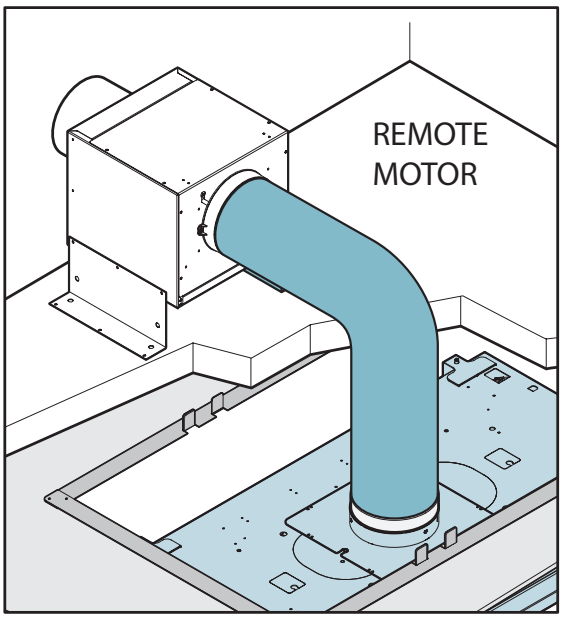


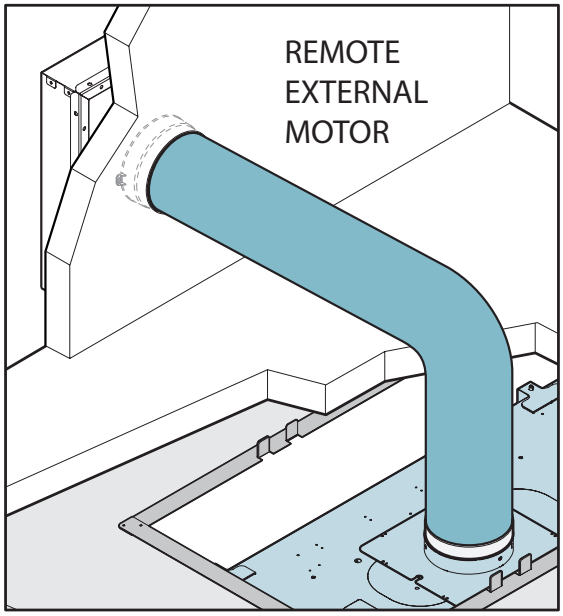

## FINAL OPERATIONS

**Passing the chains through, passing the control cable through.**

**1**

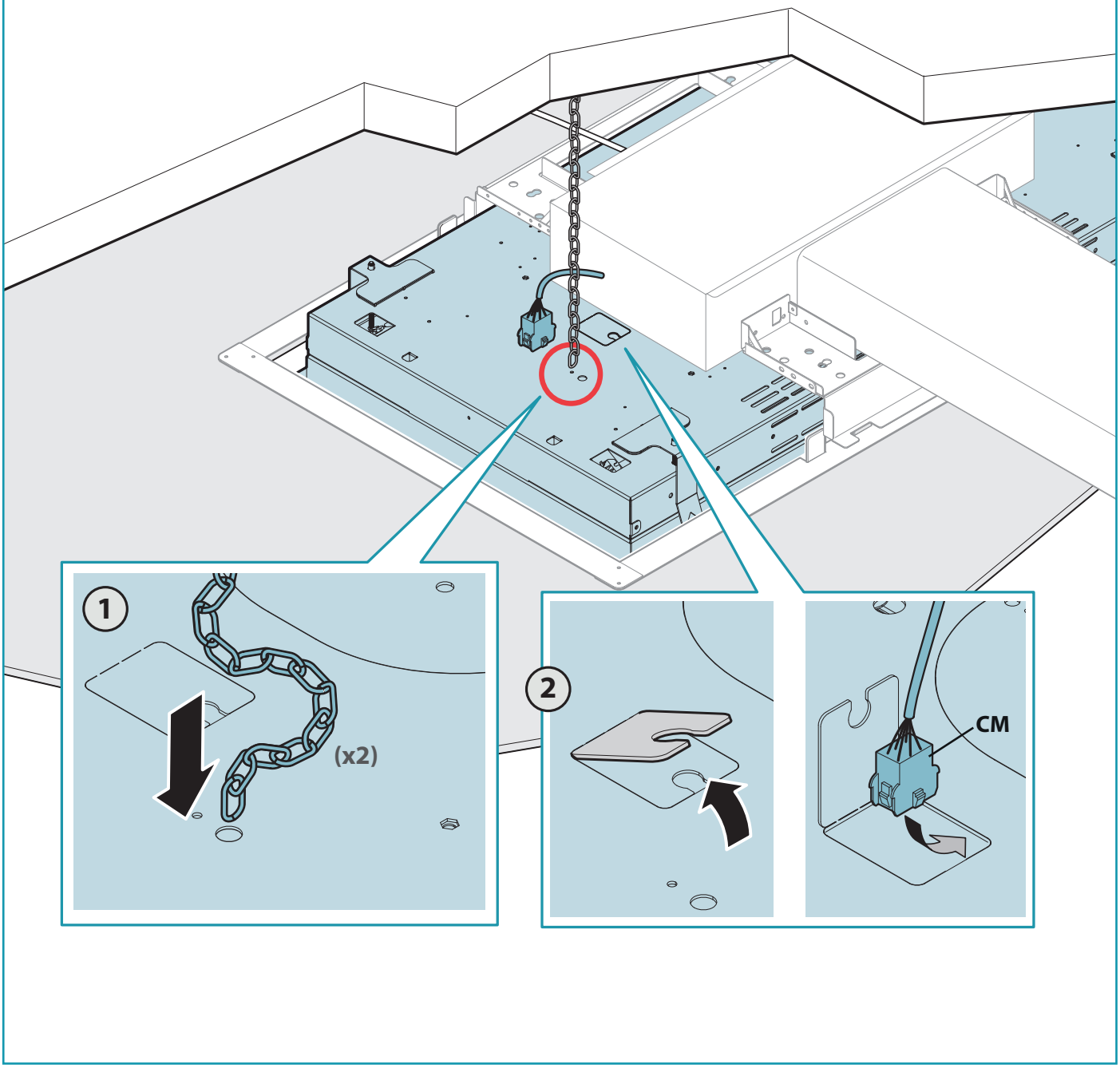

## FINAL OPERATIONS

**Closing the holding brackets.**

**2**

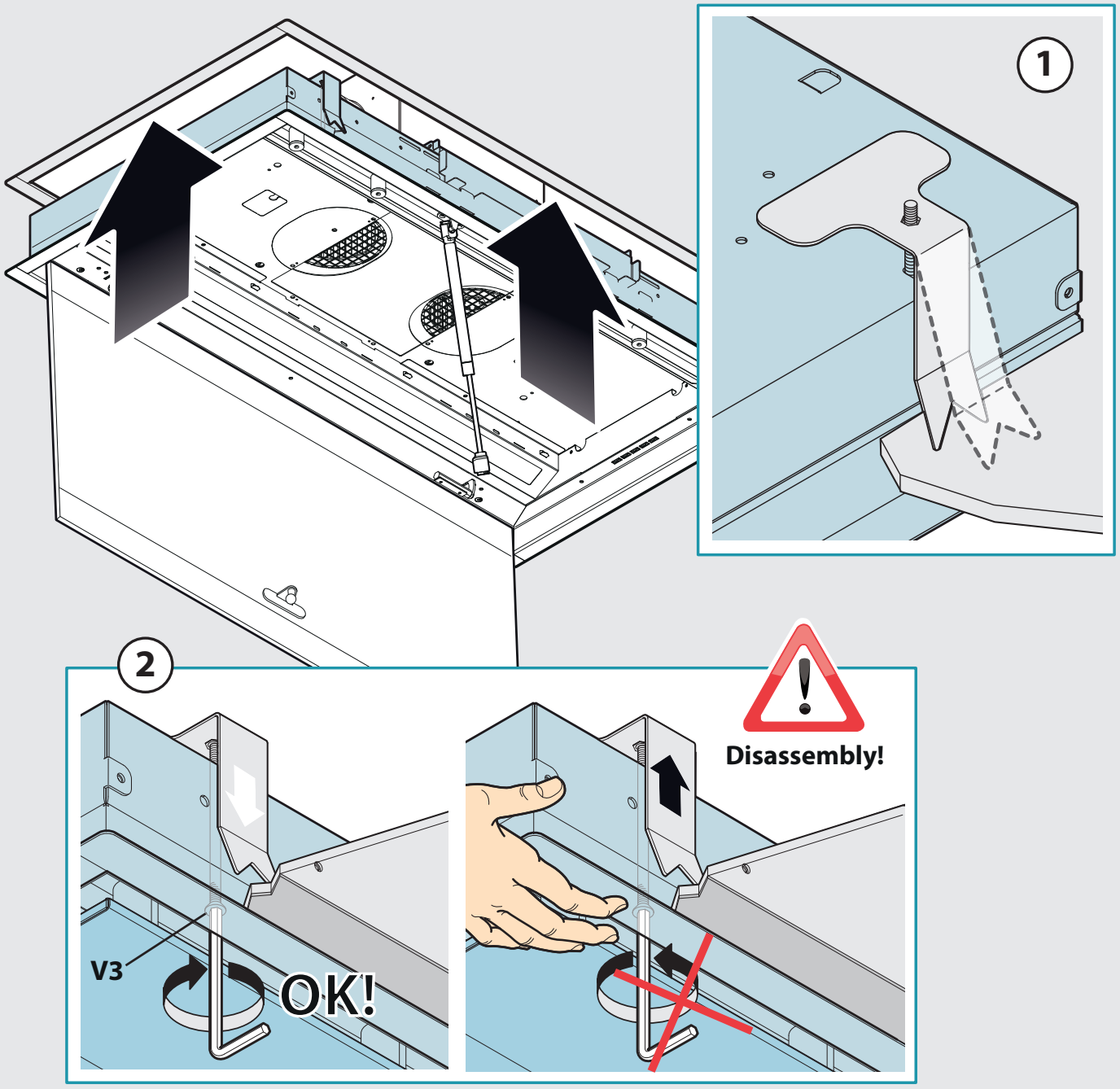

## FINAL OPERATIONS

**Fixing the motor (or rectangular connection) (3), electrical connection and tensioning the safety chains (4).**

**3**

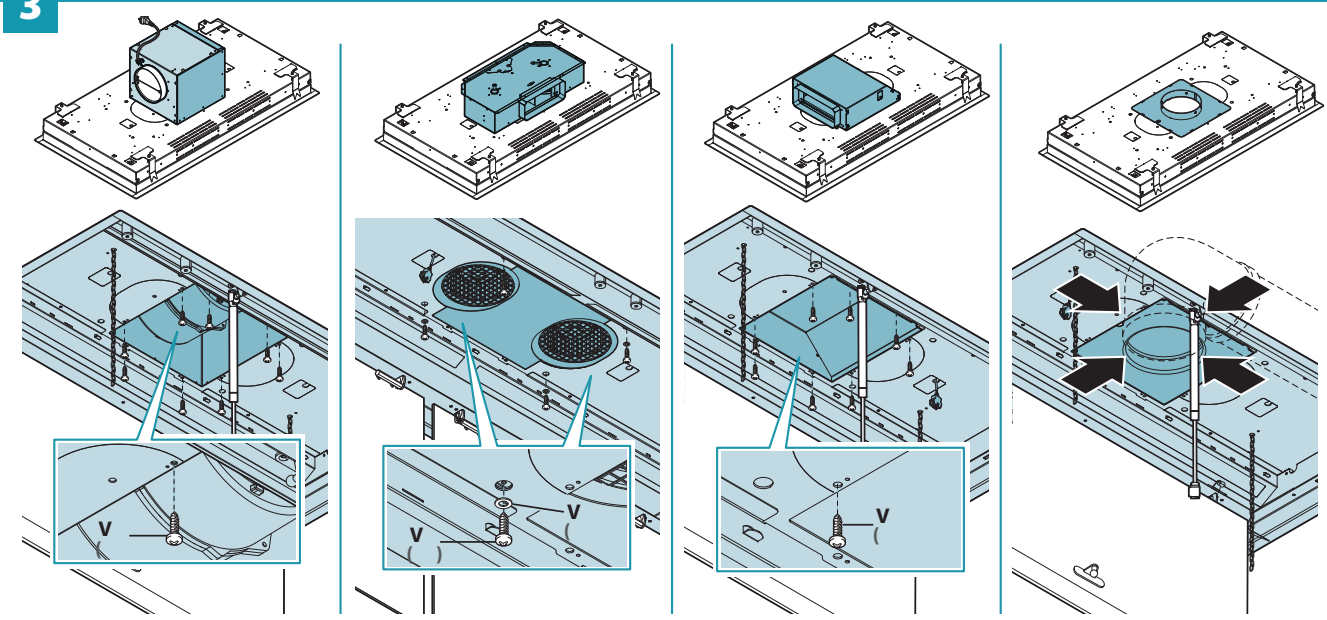


**4**

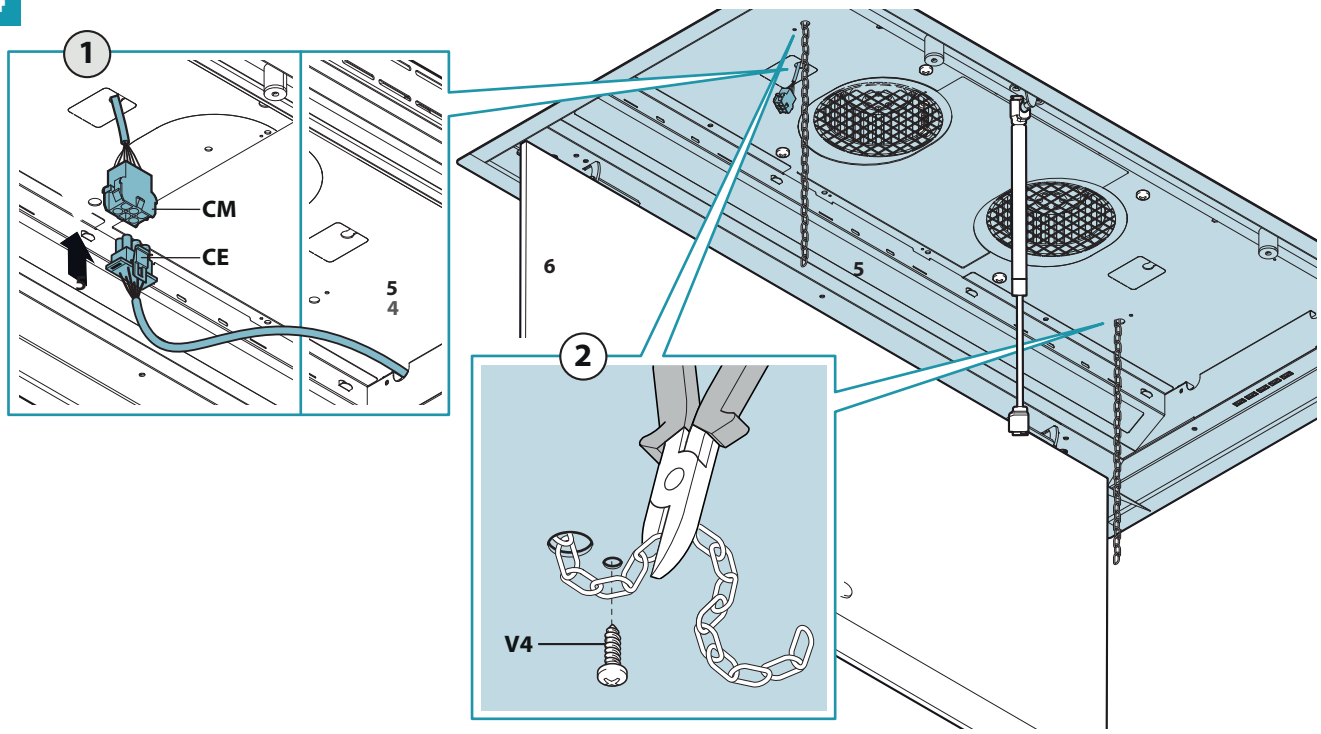

## FINAL OPERATIONS

**Repositioning of the front glass, filters and side glass panels**

**5**

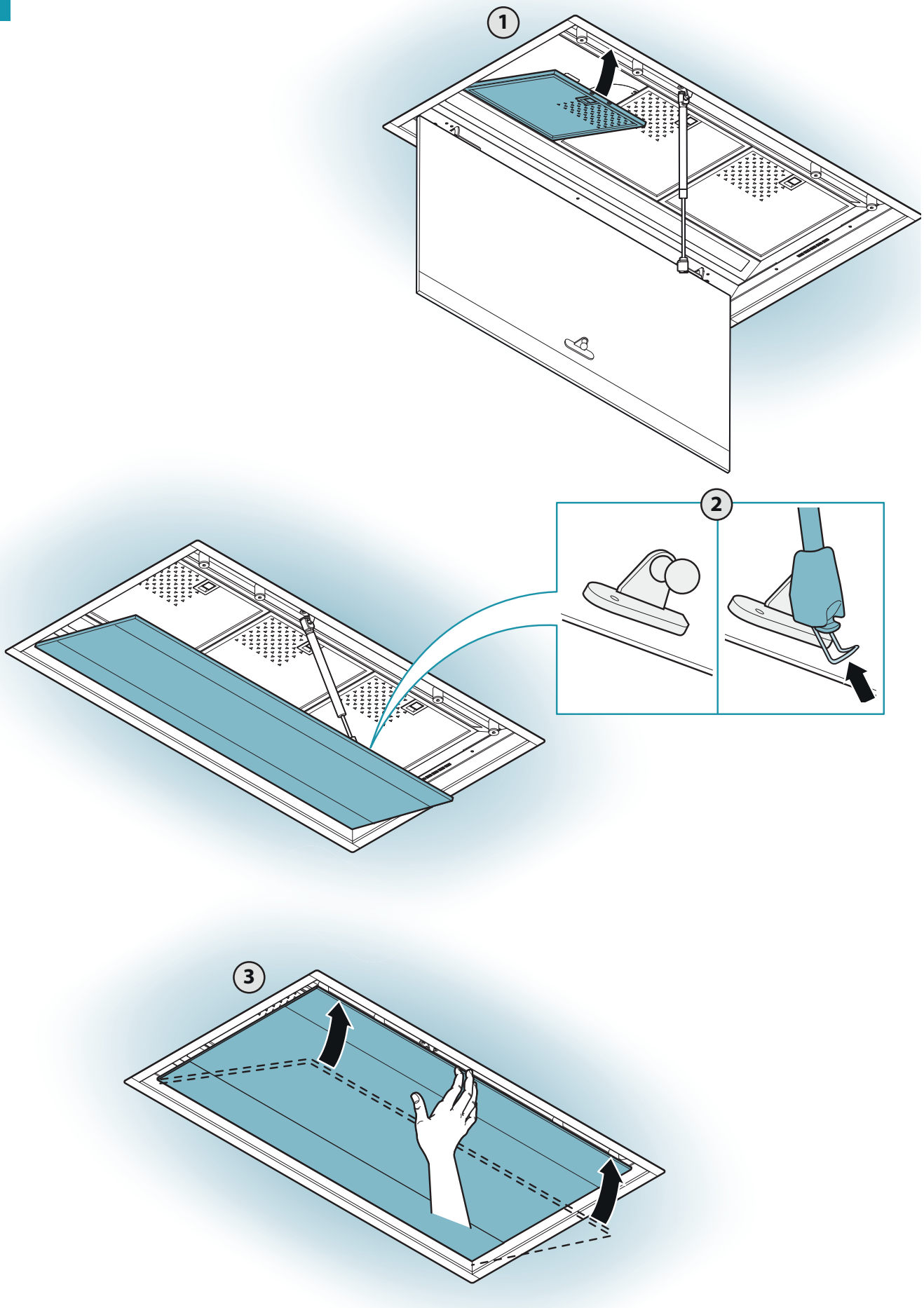

# SAFETY INSTRUCTIONS AND WARNINGS

**Installation operations are to be carried out by skilled and qualiied installers in accordance with the instructions in this booklet and in compliance with the regulations in force.**

**DO NOT use the hood if the power supply cable or other components are damaged:** disconnect the hood from the electrical power supply and contact the Dealer or an authorised Servicing Dealer for repairs.

**Do not modify the electrical, mechanical or functional structure of the equipment.**

**Do not personally try to carry out repairs or replacements. Interventions carried out by incompetent and unauthorised persons can cause serious damage to the unit or physical and personal harm, not covered by the Manufacturer's warranty.**

## WARNINGS FOR THE INSTALLER

### TECHNICAL SAFETY

**Before installing the hood, check the integrity and function of each part. Should anomalies be noted, do not proceed with installation and contact the Dealer.**

**Do NOT install the hood if an aesthetic (or cosmetic) defect has been detected. Put it back into its original package and contact the dealer.**

**No claim can be made for aesthetic (or cosmetic) defects once it has been installed.**

During installation, always use personal protective equipment (e.g.: Safety shoes) and adopt prudent and proper conduct.

The installation kit (screws and plugs) supplied with the hood is only to be used on masonry walls: in case of installation on walls of a different material, assess other installation options keeping in mind the type of wall surface and the weight of the hood (indicated on page 2).

Keep in mind that installations with different types of fastening systems from those supplied, or which are not compliant, can cause electrical and mechanical seal danger.

Do not install the hood outdoors and do not expose it to atmospheric elements (rain, wind, etc.).

### ELECTRICAL SAFETY

**The electrical system to which the hood is to be connected must be in accordance with local standards and supplied with earthed connection in compliance with safety regulations in the country of use. It must also comply with European standards regarding radio antistatic properties.**

Before installing the hood, check that the electrical mains power supply corresponds with what is reported on the identification plate located inside the hood.

The socket used to connect the installed equipment to the electrical power supply must be within reach: otherwise, install a mains switch to disconnect the hood when required.

Any changes to the electrical system must be carried out by a qualified electrician.

The maximum length of the flue fastening screws (supplied by the manufacturer) must be 13 mm. Use of non-compliant screws with these instructions can lead to danger of an electrical nature.

Do not try to solve the problem yourself in the event of equipment malfunction, but contact the Dealer or an authorised Servicing Department for repairs.

**When installing the hood, disconnect the equipment by removing the plug or switching of the main swit ch.**

### FUMES DISCHARGE SAFETY

**Do no connect the equipment to discharge pipes of fumes produced from combustion (for example boilers, ir eplaces, etc.).**

Before installing the hood, ensure that all standards in force regarding discharge of air out of the room have been complied with.

## USER WARNINGS

**These warnings have been drawn up for your personal safety and those of others. You are therefore kindly asked to read the booklet carefully in its entirety before using the or cleaning the equipment.**

**The Manufacturer declines all responsibility for any damage caused directly, or indirectly, to persons, things and pets as a consequence of failing to comply with the safety warnings indicated in this booklet.**

**It is imperative that this instructions booklet is kept together with the equipment for any future consultation.**

If the equipment is sold or transferred to another person, make sure that the booklet is also supplied so that the new user can be made aware of the hood's operation and relative warnings.

After the stainless steel hood has been installed, it will need to be cleaned to remove any residues remaining from the protection adhesive as well as any grease and oil stains which, if not removed, can cause irreversible damage to the hood surface. To properly clean the unit, the manufacturer recommends using the supplied moist wipes, which are also available sold separately.

Insist on original spare parts.

### INTENDED USE

**The equipment is solely intended to be used to extract fumes generated from cooking food in non-professional domestic kitchens: any other use is improper. Improper use can cause damage to persons, things, pets and exempts the Manufacturer from any liability.**

The equipment can be used by children over the age of 8 and by persons with reduced physical, sensory and mental abilities, or with no experience or knowledge, as long as they do so under supervision or after having received relative instructions regarding safe use of the equipment and understanding of the dangers connected to it.
Children are not to play with the equipment. Cleaning and maintenance by the user must not be carried out by children without supervision.

### USE AND CLEANING WARNINGS

**Before cleaning or carrying out maintenance operations, disconnect the equipment by removing the plug or switching of the main swit ch.**

Do not use the hood with wet hands or bare feet.

Always check that all electrical parts (lights, extractor fan) are off when the equipment is not being used.

The maximum overall weight of any objects placed or hung (if applicable) on the hood must not exceed 1.5 Kg.

Always supervise the cooking process during the use of deep-fryers: Overheated oil can catch fire.

Do not leave open, unattended flames under the hood.

Do not prepare food over an open flame under the hood.

Never use the hood without the metal anti-grease filters: in this case, grease and dirt will deposit in the equipment and compromise its operation.

Accessible parts of the hood can be hot when used at the same time as the cooking appliances.

Do not carry out any cleaning operations when parts of the hood are still hot.

There can be a risk of fire if cleaning is not carried out according to the instructions and products indicated in this booklet.

Disconnect the main switch when the equipment is not used for long periods of time.

**If other appliances that use gas or other fuels are being used at the same time (boiler, stove, ir eplaces, etc.), make sure the room where the fumes are discharged is well-ventilated, in compliance with the local regulations.**

# INSTALLATION
## only intended for qualiied personnel

**Before installing the hood, carefully read the chapter 'SAFETY INSTRUCTIONS AND WARNINGS'.**

## TECHNICAL FEATURES

The technical specifications are exhibited on the labels located inside the hood.

## POSITIONING

**The minimum distance between the highest part of the cooking equipment and the lowest part of the hood is indicated in the installation instructions.**
Generally, when the hood is placed over gas cookers, the distance must be at least 65 cm (25.6"). However, according to an interpretation of standard EN60335-2-31 dated 11-07-2002 of TC61 (sub-clause 7.12.1 meeting 15 agenda item 10.11), the minimum distance between the cooker and lower part of the hood can be reduced to the quota reported in the installation instructions.
Should the instructions for the gas cooker specify a greater distance, this must be taken into consideration.
Do not install the hood outdoors and do not expose it to outdoor environment (rain, wind, etc.).

## ELECTRICAL CONNECTION
**(only intended for qualiied personnel)**

**Disconnect the equipment from electrical mains power supply before carrying out any operations on the hood.**
**Ensure that the wires inside the hood are not disconnected or cut:**
**in the event of damage, contact your nearest Servicing Department.**
**Refer to qualiied personnel f or electrical connections.**
**Connection must be carried out in compliance with the provisions of law in force.**
Before connecting the hood to the electrical mains power supply, check that:
- voltage supply corresponds with what is reported on the data plate located inside the hood;
- the electrical system is compliant and can withstand the load (see the technical specifications located inside the hood);
- the power supply plug and cable do not come into contact with temperatures exceeding 70 °C;
- the power supply system is effectively and properly connected to earth in compliance with regulations in force;
- the socket used to connect the hood is within reach.

In case of:
- devices fitted with cables without a plug: the type of plug to use is a "standardised" one. The wires must be connected as follows: yellow-green for earthing, blue for neutral and brown for the phase. The plug must be connected to an adequate safety socket.
- fixed equipment not provided with a power supply cable and plug, or any other device that ensures disconnection from the electrical mains, with an opening gap of the contacts that enables total disconnection in overvoltage category III conditions.
  Said disconnection devices must be provided in the mains power supply in compliance with installation regulations.

The yellow/green earth cable must not be cut off by the switch.
The Manufacturer declines all responsibility for failure to comply with the safety regulations.

## FUMES DISCHARGE

### EXTERNAL EXHAUST HOOD (SUCTION)

In this version the fumes and vapours are discharged outside through the exhaust pipe.
To this end, the hood outlet fitting must be connected via a pipe, to an external output.

The outlet pipe must have:
- a diameter not less than that of the hood fitting.
- a slight slope downwards (drop) in the horizontal sections to prevent condensation from flowing back into the motor.
- the minimum required number of bends.

- the minimum required length to avoid vibrations and reduce the suction performance of the hood.
  You are required to insulate the pipes if it passes through cold environments.
  In the presence of motors with 800m³/h or higher, a check valve is present to prevent external air flowing back.

*Deviation for Germany:*
*when the kitchen hood is used at the same time as appliances that are powered by energy other than electricity, the negative pressure in the room must not exceed 4 Pa (4 x 10-5 bar).*

### HOOD WITH INTERNAL RECIRCULATION (FILTERING)

In this model, the air passes through an optional filter unit in the ceiling to be purified and recycled in the environment.

In this version the check valve must not be assembled: remove it if it is on the air outlet fitting of the motor.

## ASSEMBLY INSTRUCTIONS
**only intended for qualiied personnel**

**The hood can be installed in various conigur ations.**
**The generic assembly steps apply to all installations; for each case, follow the speciic st eps provided for the required installation.**

# OPERATION

### WHEN TO TURN ON THE HOOD?
Switch on the hood at least one minute before starting to cook to direct fumes and vapours towards the suction surface.
After cooking, leave the hood operating until complete extraction of all vapours and odours.
By means of the Timer function, it is possible to set auto switch-off function which will allow the hood to turn off automatically after 15 minutes of operation.

### WHICH SPEED IS TO BE SELECTED?
**1st speed:** maintains the circulation of clean air with low electricity consumption.
**2nd speed:** normal conditions of use.
**3rd speed:** presence of strong odours and vapours.
**4th speed:** rapid disposal of odours and vapours.

### WHEN SHOULD THE FILTERS BE WASHED OR REPLACED?
The metal filters must be cleaned every 30 hours of operation.
For further details see the **"MAINTENANCE"** chap.

## ELECTRONIC PUSHBUTTON PANEL

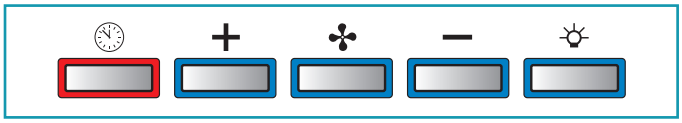

| | | |
|---|---|---|
| | **Motor ON/OFF**<br>Upon start-up, the speed is that stored at the previous operation. | |
| + | **Increase speed from 1 to 4**<br>Speed 4 is only active for a few minutes, then speed 3 activates. | The speeds are indicated by the LEDs on the keys:<br> 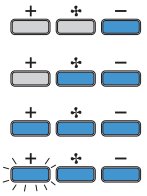 <br>Speed 1<br>Speed 2<br>Speed 3<br>Speed 4<br>("+" LED flashing) |
| – | **Reduce speed from 4 to 1** | |
| | **Light on/of** | |
| | **TIMER** (red LED flashing)<br>Auto switch-off after 15 min.<br>The function deactivates (red LED off) if:<br>- The TIMER key ( ) is pressed again.<br>- The ON/OFF key ( ) is pressed. | |

# USING THE RADIO CONTROL

**WARNINGS!:**
**Place the hood away from sources of electromagnetic waves (e.g. microwave ovens), which could interfere with the radio control and with the hood electronics. The maximum operating distance is 5 metres, that may vary according to the presence of electromagnetic interferences.**
**Radio control operated at 433.92MHz.**
**The radio control consists of two parts:**
**- the receiver built into the hood;**
**- the transmitter shown here in the igur e.**

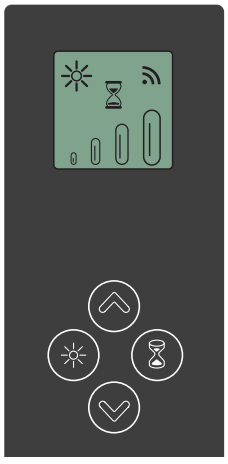

| DESCRIPTION OF TRANSMITTING COMMANDS | |
|---|---|
| | **UP**<br>Motor switch-on and speed increase from 1 to 4. Speed 4 is only active for a few minutes. |
| | **DOWN**<br>Speed decrease and motor switch-off. |
| | **Light ON-OFF** |
| | **TIMER ON:** The motor automatically switches off after 15 min.<br>The function is automatically disabled if the motor is switched off ( key) |
| | **Command transmission active** |

### RADIO CONTROL CODE CHANGE

With only one radio control, go directly to point 2.
With several radio controls in the same room, a new code can be created by following the procedure below.

**Disconnect the power to the hood before starting the procedure.**

### 1) - CREATE A NEW CODE

The procedure is to be carried out on the radio control.

- Press LIGHT and TIMER simultaneously until the display starts flashing.
- Press DOWN on the radio control: saving is confirmed by three brief flashes of the display. The new code cancels and replaces the previous default code.

**Reconnect the hood to the electrical power supply, making sure that the lights and motor are of .**

### 2A) - ASSOCIATING THE RADIO CONTROL WITH THE HOOD USING THE ELECTRONIC PUSHBUTTON PANEL

press TIMER ( ) **on the hood pushbutton panel** for 2 seconds:
the red LED lights up.
press any key on the radio control within 10 seconds.

### RESTORING DEFAULT CODE

the procedure is to be carried out if the hood is disposed of, sold or transferred.

**Disconnect the power to the hood before starting the procedure.**

- Press UP and DOWN simultaneously on the radio control for more than 5 seconds: reset is confirmed by three brief flashes of the display.
- Reconnect the hood to the electrical power supply.
- Proceed with associating the hood and the radio control, as described in point 2.

## MAINTENANCE

**Before cleaning or carrying out maintenance operations, disconnect the equipment by removing the plug or switching of the main swit ch.**
**Do not use detergents containing abrasive, acidic or corrosive substances or abrasive cloths.**

Regular maintenance guarantees proper operation and performance over time.
Special attention is to be paid to the **metal anti-grease ilt ers** : frequent cleaning of the filters and their supports ensures that no flammable grease is accumulated.

### CLEANING OF EXTERNAL SURFACES

You are advised to clean the external surfaces of the hood **at least once every 15 days** to prevent oily substances and grease from sticking to them. To clean the brushed stainless steel hood, the Manufacturer recommends using "Magic Steel" wipes.
Alternatively **and for all the other types of surfaces**, it can be cleaned using a damp cloth, slightly moistened with mild, liquid detergent or denatured alcohol.
Complete cleaning by rinsing well and drying with soft cloths.

**Do not use too much moisture or water around the push button control panel and lighting devices in order to prevent humidity from reaching electronic parts.**

The glass panels can only be cleaned with specific, non-corrosive or non-abrasive detergents using a soft cloth.
The Manufacturer declines all responsibility for failure to comply with these instructions.

### CLEANING OF INTERNAL SURFACES

**Do not clean electrical parts, or parts related to the motor inside the hood, with liquids or solvents.**
For the internal metal parts, see the previous paragraph.

### METAL ANTI-GREASE FILTERS

It is advised to **frequently** wash the metal filters (**at least once a month**) leaving them to soak in boiling water and cleaning solution for 1 hour, taking care not to bend them.
Do not use corrosive, acid or alkaline detergents.
Rinse them well and wait for them to be completely dry before reassembling them.
Washing in a dishwasher is permitted, however, it may cause the filter material to darken: to reduce the possibility of this problem from happening, use low-temperature washes (55°C max.).
To extract and insert the metal anti-grease filters see the assembly instructions.

### LIGHTING

The hood has fluorescent lamp lighting.
If the lamp ever needs to be replaced, proceed as shown in the figure.

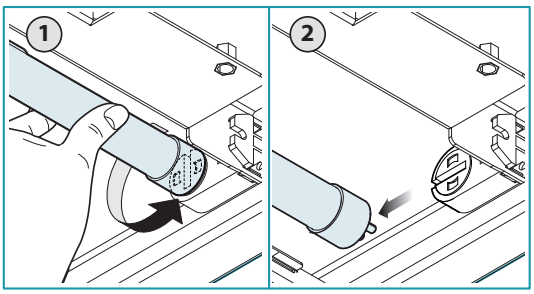


## DISPOSAL AFTER END OF USEFUL LIFE

The crossed-out trash or refuse bin symbol on the appliance means that **the product is WEEE**, i.e. **"**Waste electrical and electronic equipment", accordingly **it must not be disposed of with regular unsorted waste** (i.e. with "mixed household waste"), but it must be disposed of separately so that it can undergo specific processing for its re-use, or a specific treatment, to remove and safely dispose of any substances that may be harmful to the environment and remove the raw materials that can be recycled. Proper disposal of these products contributes to saving valuable resources and avoid potential negative effects on personal health and the environment, which may be caused by inappropriate disposal of waste.
You are kindly asked to contact your local authorities for further information regarding the designated waste collection points nearest to you. Penalties for improper disposal of such waste can be applied in compliance with national regulations.

### INFORMATION ON DISPOSAL IN EUROPEAN UNION COUNTRIES

The EU WEEE Directive was implemented differently in each country, accordingly, if you wish to dispose of this appliance we suggest contacting your local authorities or dealer to find out what the correct method of disposal is.

### INFORMATION ON DISPOSAL IN NON-EUROPEAN UNION COUNTRIES

The crossed-out trash or refuse bin symbol is only valid in the European Union: if you wish to dispose of this appliance in other countries, we suggest contacting your local authorities or dealer to find out what the correct method of disposal is.

**WARNING!**

The Manufacturer reserves the right to make changes to the equipment at any time and without prior notice. Printing, translation and reproduction, even partial, of this manual are bound by the Manufacturer's authorisation.
Technical information, graphic representations and specifications in this manual are for information purposes and cannot be divulged.
This manual is written in Italian. The Manufacturer is not responsible for any transcription or translation errors.

# WARRANTY

All FALMEC rangehoods come with a 5 year parts and labour warranty. PR Kitchens & Washrooms will correct, free of charge, any defects in material or workmanship for the period of 5 years, subject to the terms of our warranty stated below.

This warranty will be void if a Falmec range hood is used for commercial purposes. Some examples of commercial purposes but not limited to, include restaurants, cafes, schools and clubs.

Rangehoods in the Falmec range (excluding BBQ models) are designed and warranted "strictly" for indoor use only (household kitchen).

1. This warranty only applies for products installed by a qualified person and when provided with a certificate of compliance in accordance with State/Territory laws.

2. This product must be used in accordance with the manufacturer's instructions. This warranty does not apply should the defect in or failure of the product be attributable to misuse, abuse, accident or non-observation of the manufacturer's instructions on the part of the user. FALMEC appliances does not accept liability for any direct or consequential loss, damage or other expense caused by or arising out of any failure to install or use the product in accordance with the manufacturer's instructions.

3. The warranty does not cover failures due to normal wear and tear with reasonable use or consumable components such as globes, filters, etc.

4. PR Kitchens & Washrooms, at its own discretion may replace or repair any defective component(s) to affect a repair due to any faulty workmanship and material. The warranty does not cover breakage of outer glass panels attributed to external damage.

5. The warranty provided is a "Repair Warranty" and in an extreme event if a repair cannot take place, a replacement will be provided of an equivalent current model where the balance of the warranty period from the original date of purchase will take effect.

6. This warranty is immediately void if the serial or model number label is removed, defaced, serviced or repaired by a unauthorised/unqualified personal or used for industrial/commercial purposes.

7. Warranty will be only provided when a proof of the original purchase is presented to an authorised dealer or reseller before or at the time of service.

8. This warranty does not cover any corrosion or defect as a result of the product being installed in an environment in which the appliance is not protected from the weather.

9. It is the responsibility of the customer to ensure the appliance is easily accessible for a service technician to carry out required repairs. Any obstruction prohibiting access to the product by building materials of any kind will be required to be removed and reinstalled by the customer.

10. PR Kitchens & Washrooms has a service network in all metropolitan areas and most regional areas. Where the warranty claim has been made outside a radius of 50km from any store where the product can be purchased, the customer is responsible for the cost of delivery to the nearest service agent or the travel cost for a technician to travel to a location outside the 50km radius.

**PRODUCT SOLD IN AUSTRALIA ONLY**:

At PR Kitchens & Washrooms our goods come with guarantees that cannot be excluded under the Australian Consumer Law. You are entitled to a replacement or refund for a major failure and compensation for any other reasonably foreseeable loss or damage. You are also entitled to have the goods repaired or replaced if the goods fail to be of acceptable quality and the failure does not amount to a major failure.

**OUTDOOR USE RANGEHOODS**

Outdoor BBQ models from Falmec are warranted for use above barbecues and in alfresco areas with one open wall and a solid roof such as that they are not exposed to the elements.

Outdoor BBQ models MUST only have the specified 2010 m3/hr motor installed in conjunction with the hood.

In the scenario where the hood is located near the ocean or exposed to salty air, regular care and cleaning of the hood is recommended to prevent any corrosion.

**REMOTE MOTOR RANGE HOODS**

In addition to the standard 5 years parts and labour warranty stated above the remote motors from the Professional series are covered for an additional 5 years as a part only warranty therefore giving a total coverage of 10 years. This warranty is conditional by the following items

• If installed in coastal applications the external housing must have anti-corrosive coating applied. The internal fan may also require additional cleaning/washdown as a result of exposure to salt in the air.

• Fan must be installed in a position that it will not be subjected to excessive duct temperatures (40˚ covers all models).

• Filters must be in place within the rangehood and regularly maintained/cleaned/ replaced as needed.

**SUPPORT**

At PRKS we place great importance on customer satisfaction and that is why we have established a dedicated and experienced customer support team that you can rely on.

Should you ever need to make a warranty related enquiry about your FALMEC product, you can lodge the enquiry at:

**AUSTRALIA**

www.prkws.com

customercare@prks.com.au

03 9700 9100

**NEW ZEALAND**

www.prkws.com

customercare@prks.co.nz

09 964 0400

We suggest you have the following information close at hand:

1. Model number of your product
2. A copy of your original purchase receipt
3. Address details of where the product is installed.

Any relevant pictures can be attached if lodging the claim online

falmec
Life inspired.

## Australia

**PR Kitchen & Washroom Systems**
**83 Bangholme Rd**
**Dandenong South**
**VIC — 3175**
**Australia**
**+61 3 9700 9100**
**info@prks.com.au**

## New Zealand

**PR Kitchen & Washroom Systems NZ**
**P.O. Box 53171, Auckland Airport**
**Auckland — 2150**
**New Zealand**
**+09 964 0400**
**info@prks.com.nz**

## Falmec S.p.A

**via dell'Artigianato, 42 z.i.**
**31029 Vittorio Veneto**
**Treviso — Italy**
**falmec.com**

**falmec.com.au**

**@falmecAustralia**

**@falmecaustralia**

**Codice / Code**
**Matricola / Serial Number**

Code 110033080 Ed. 02/2019